R 415011

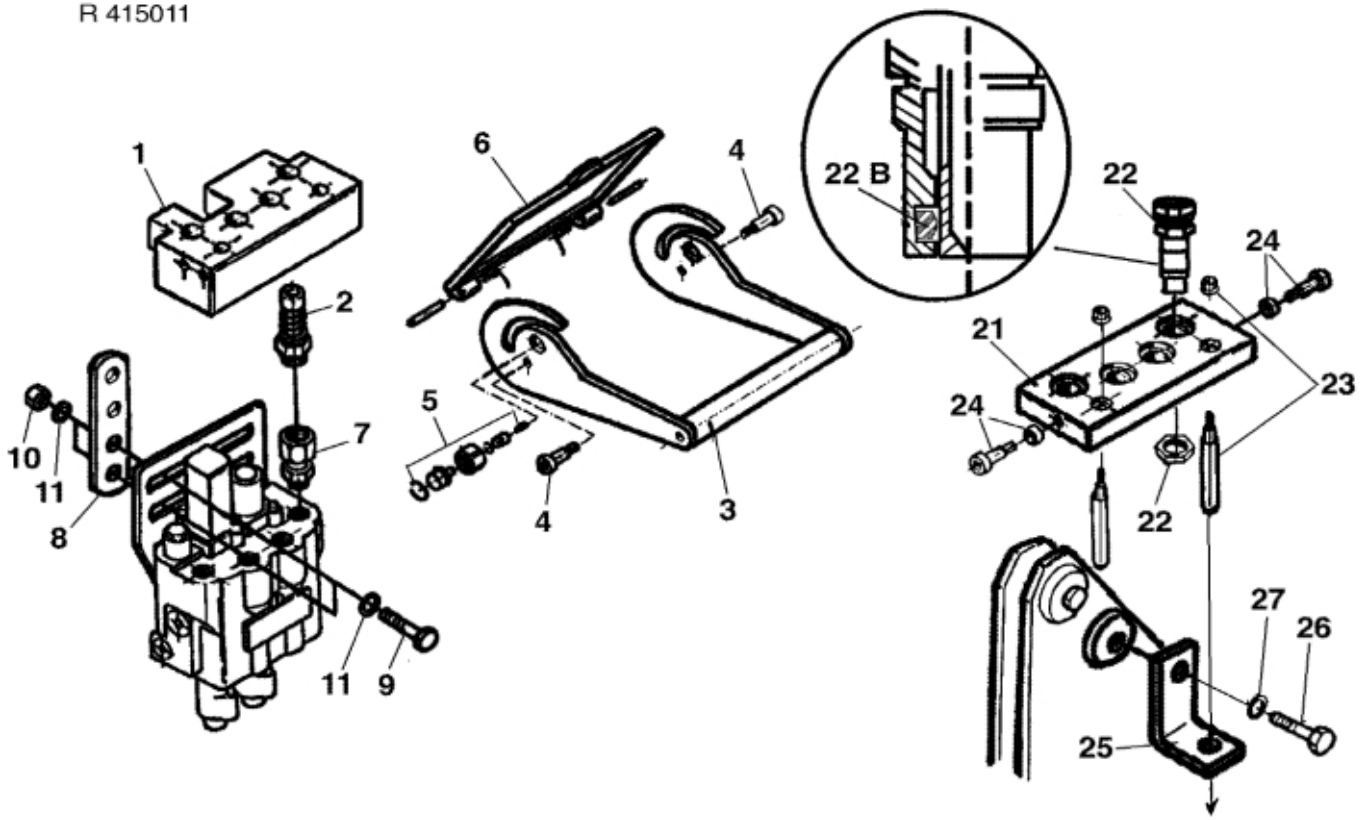

© 2025 Jost

Description	Aimed for control valve
Part assemblies	HYDRO - QUICK MK 2
Specification	Year To: 12/31/2001 12:00:00 AM

PartNo	Pos	Qty	Name	Specifications
301543	1	1 PCS	Lower part	PS06 F
301544	2	4 PCS	Coupler (F)	FFNB 38-2/2215 F
301546	3	1 PCS	Lever	L P6
301547	4	2 PCS	Screw	KIT VP4
301548	5	1 PCS	Safety Kit	Kit SP4
301549	6	1 PCS	Dust Cap	TA P6
301552	7	4	Coupling	AD 12G-DMLR15
301551	8	1 PCS	Support	
5002078	9	2	Screw	M6S 10x40 (8.8)
5011054	10	2	Nut	M6M M10
5013110	11	4	Washer	BRB 10.5x22x2
301553	21	1 PCS	Upper part	2PS06 M
301545	22	4 PCS	Coupler (M)	2FFNP 38-20/12 M
5045407	22B	1	Seal kit	Supplied in bags of 10 pcs
301554	23	2 PCS	Dowel	Kit GP 4
301547	24	2 PCS	Screw	KIT VP4
301550	25	1 PCS	Support	
5002089	26	1	Screw	M6S 10 x 25
5013110	27	1	Washer	BRB 10.5x22x2

© 2025 Jost