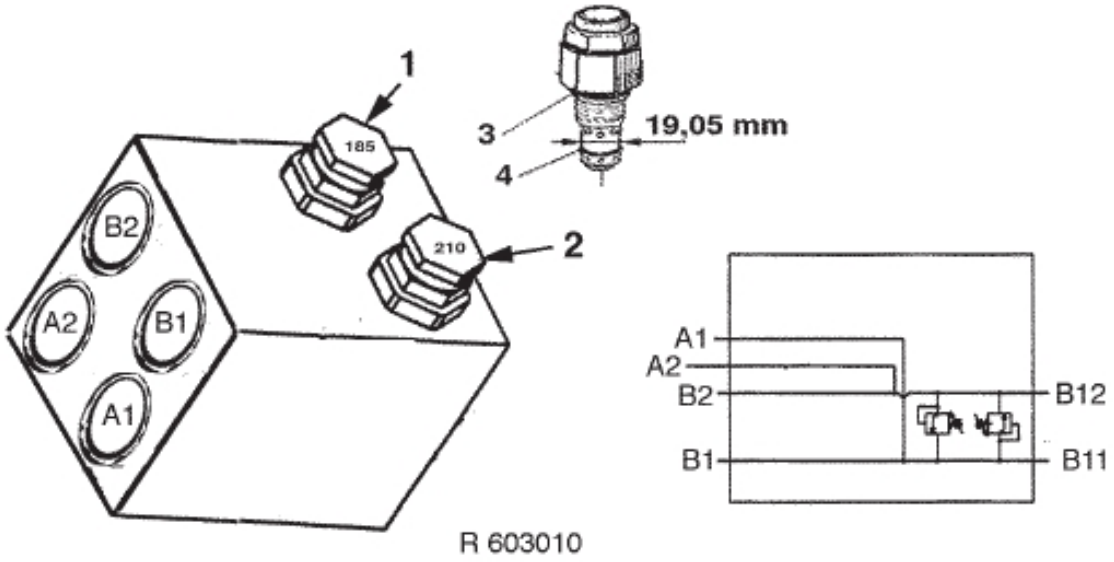

R 603010

© 2025 Jost

Part assemblies Valve

PartNo	Pos	Qty	Name	Specifications
511151		1 PCS	Valve	
521259	1	1 PCS	Security Valve	185 bar
521260	2	1 PCS	Security Valve	210 bar
519041	3	1 PCS	• O-ring	102/5/00397
519036	4	1 PCS	• O-ring	102/5/00427

© 2025 Jost