R 415116

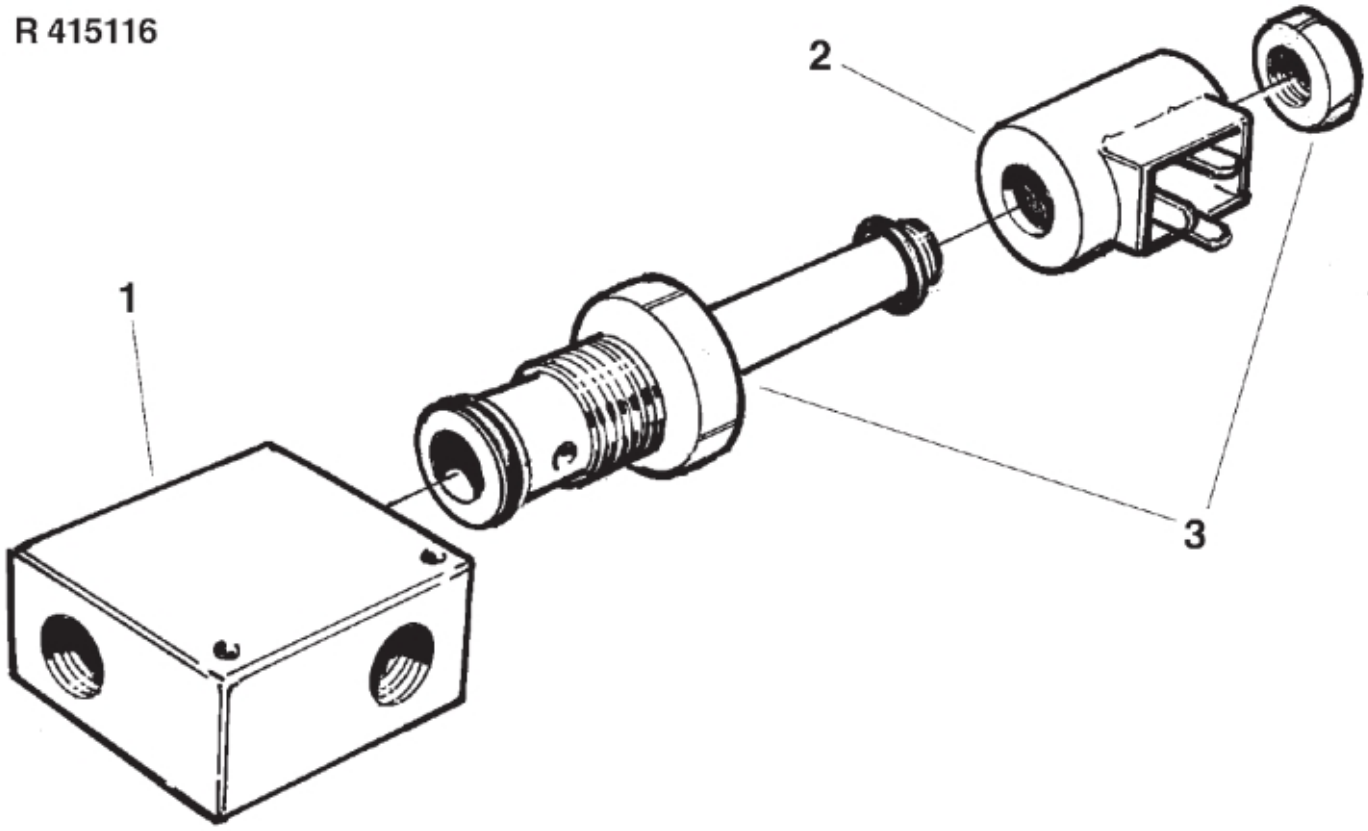



© 2025 Jost

**Part assemblies** Valve

| PartNo | Pos | Qty | Name | Specifications |
|---|---|---|---|---|
| 516044 | 1 | 1 PCS | Housing | |
| 516045 | 2 | 1 PCS | Solenoid | |
| 516049 | 3 | 1 PCS | Cartridge valve | |


© 2025 Jost