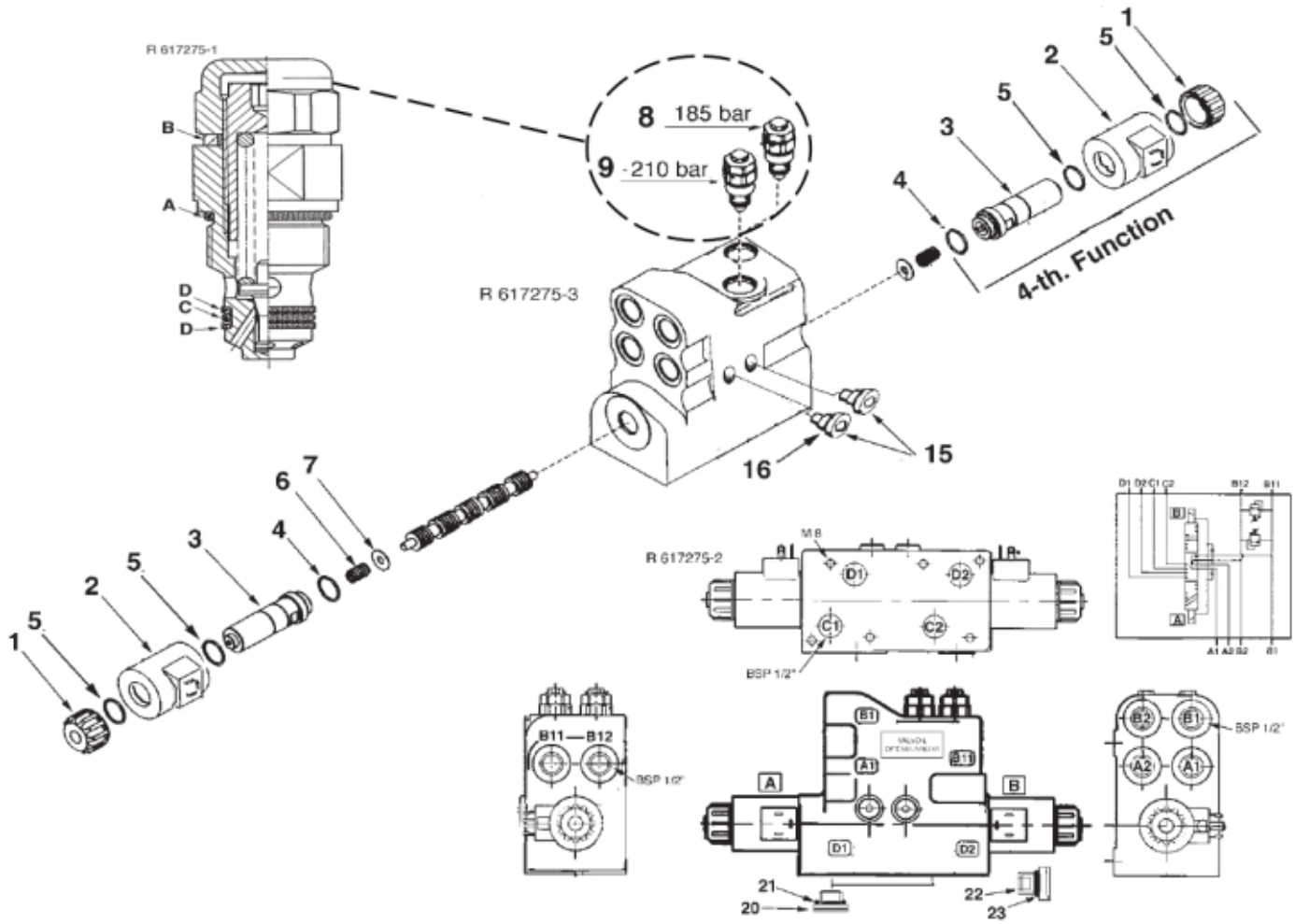
R 617275-1
B
A
D
C
D
8 185 bar
9 210 bar
R 617275-3
16
15
4-th. Function
1
5
2
5
3
4
6
7
R 617275-2
M 8
B
A
D1
D2
C1
C2
BSP 1/2"
B11—B12
BSP 1/2"
B1
A1
B11
A
B
D1
D2
21
20
22
23
B2
B1
A2
A1
BSP 1/2"

© 2025 Jost

Description	Walvoil DFE 141/8 - 516131
Part assemblies	Control valve
Specification	Specification: 3rd service

PartNo	Pos	Qty	Name	Specifications
516139	1	1	Nut	Replaced by Solenoid kit 4501276.
516140	2	1	Solenoid	Replaced by Solenoid kit 4501276.
516141	3	1	Core	Replaced by Solenoid kit 4501276.
5037016	4	1	O-ring	23.47x2.62 Replaced by Solenoid kit 4501276.
5037058	5	2	O-ring	29.87x1.78 Replaced by Solenoid kit 4501276.
516113	6	2	Spring	
516138	7	2	Washer	
516136	8	1 PCS	Security Valve	185 bar
516137	9	1 PCS	Security Valve	210 bar
5037054	A	1 PCS	O-ring	18,77 x 1,78 (70Sh)
516143	B	1 PCS	Washer	GM 2000 - M16
5037059	C	1	O-ring	12,42 x 1,78 (70Sh)
5038428	D	2	Support Ring	13,16 x 1,2
516119	15	2 PCS	Check valve	Kit 510261
5037278	16	1 PCS	O-ring	11,91 x 2,62
521690	20	2 PCS	Plug	TCCI BSPP 1/2"
5037277	21	1 PCS	O-ring	18,72 x 2,62 (90Sh)
516142	22	1	Plug	
5037016	23	1	O-ring	23.47x2.62

© 2025 Jost