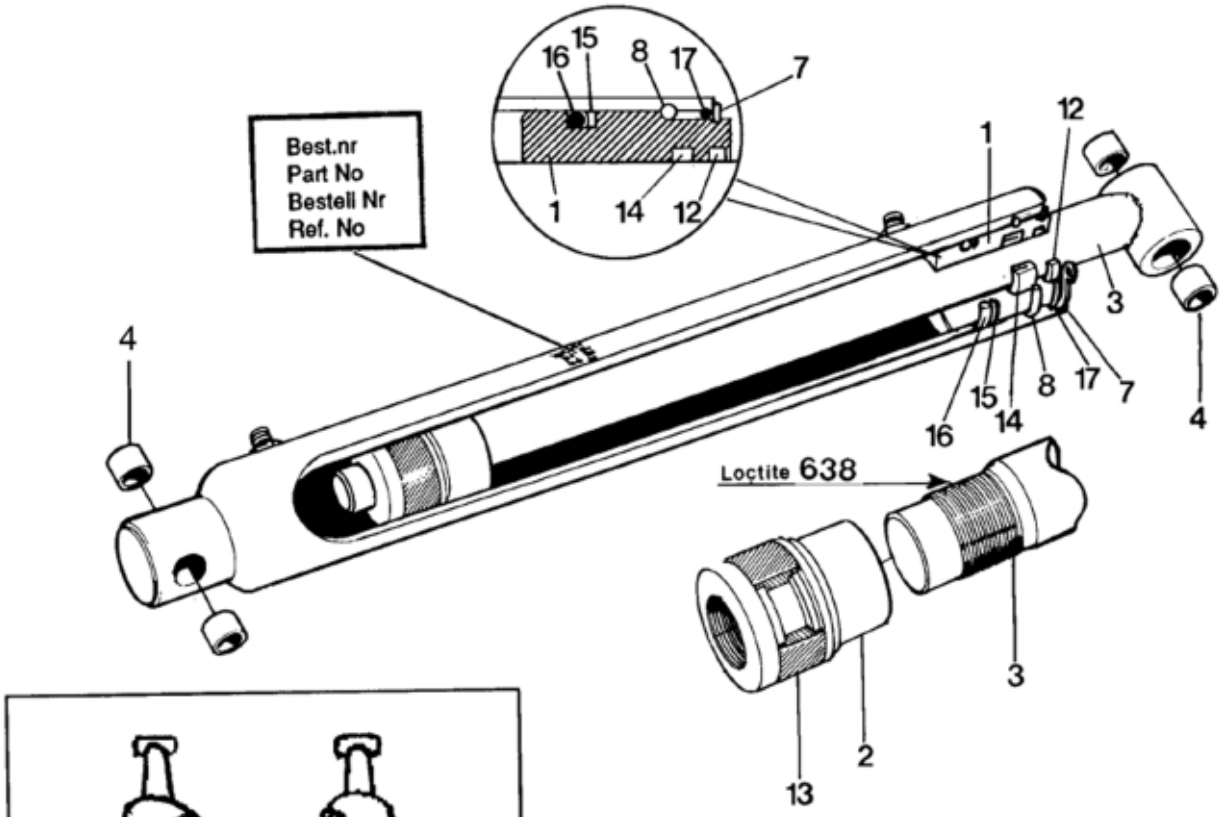
Best.nr
Part No
Bestell Nr
Ref. No
Loctite 638

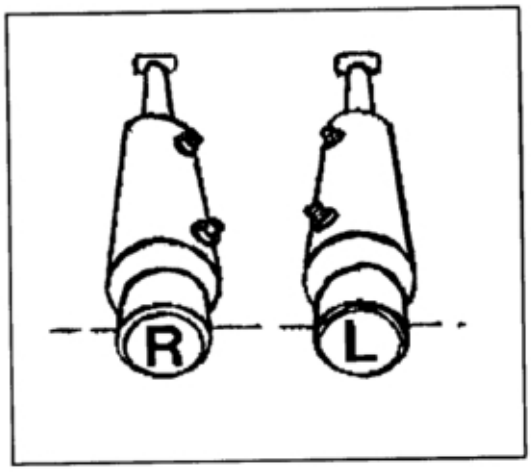
R
L

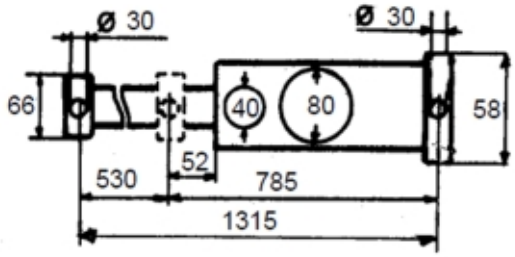
Ø 30
Ø 30
66
40
80
58
52
530
785
1315

© 2025 Jost

Description	Ø 80/40 mm
Part assemblies	Cylinder LH
Specification	Year To: 12/31/2001 12:00:00 AM

PartNo	Pos	Qty	Name	Specifications
724011	1	1	Bearing	
711012	2	1	Piston	
737023	3	1	Piston rod	(7 37 013)
5018515	4	4	Bushing	D30 L=20
5016620	7	1	Retaining ring	
5016667	8	1	Retaining ring	
5036154		1	Seal kit	D80/40
5038101	12	1	• Wiper	40/50x7/10
5038285	13	1	• Piston seal	
5038254	14	1	• Seal	40/50x10
5038405	15	1	• Support Ring	
5037407	16	1	• O-ring	
5037241	17	1	• O-ring	72,62 x 3,53

© 2025 Jost