R 741010_742010

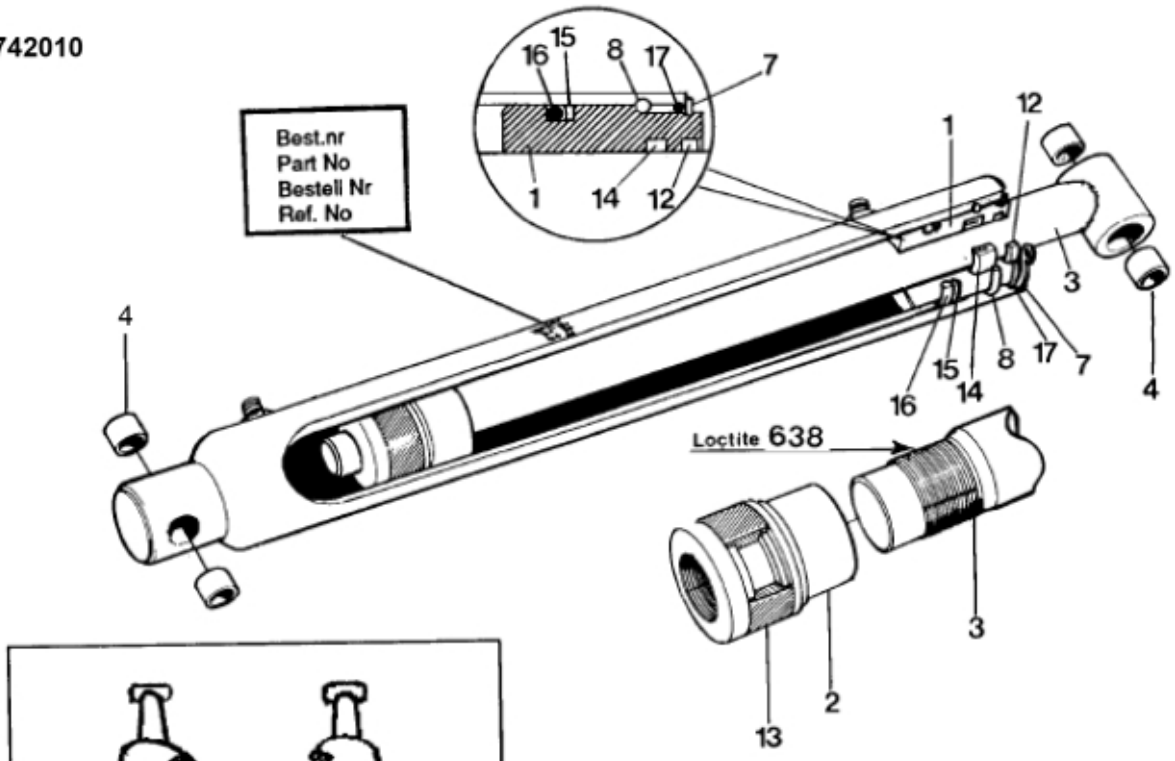

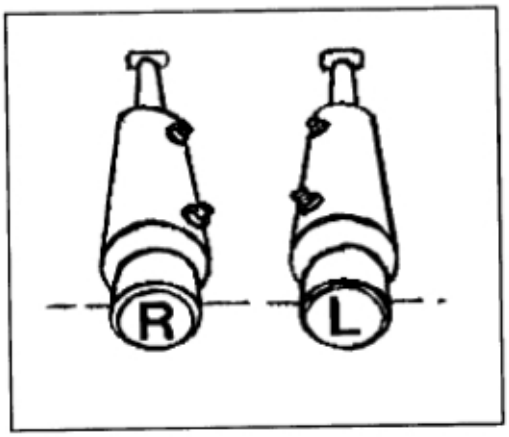

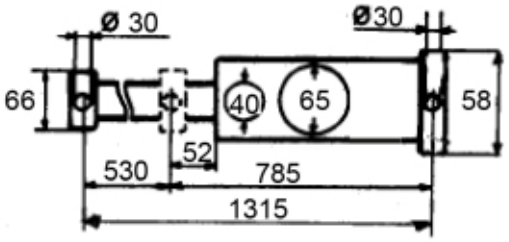

© 2025 Jost

Description	Ø 65/40 mm
Part assemblies	Cylinder RH
Specification	Year To: 12/31/2001 12:00:00 AM

PartNo	Pos	Qty	Name	Specifications
727011	1	1	Bearing	
719012	2	1	Piston	
737023	3	1	Piston rod	(7 37 013)
5018515	4	4	Bushing	D30 L=20
5016608	7	1	Circlip	
5016668	8	1	Retaining ring	
5036155		1	Seal kit	D65/40
5038101	12	1	• Wiper	40/50x7/10
5038289	13	1	• Piston seal	
5038254	14	1	• Seal	40/50x10
5038418	15	1	• Support Ring	
5037404	16	1	• O-ring	
5037242	17	1	• O-ring	58,74 x 3,53

© 2025 Jost