R 751010_752010

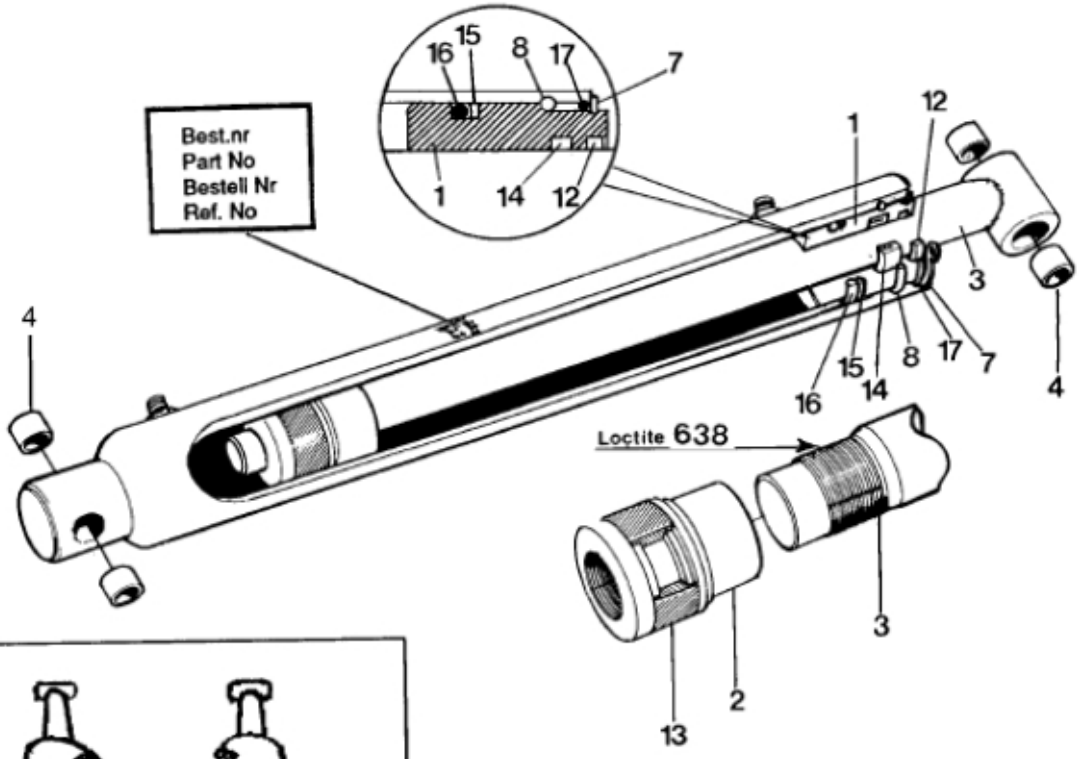

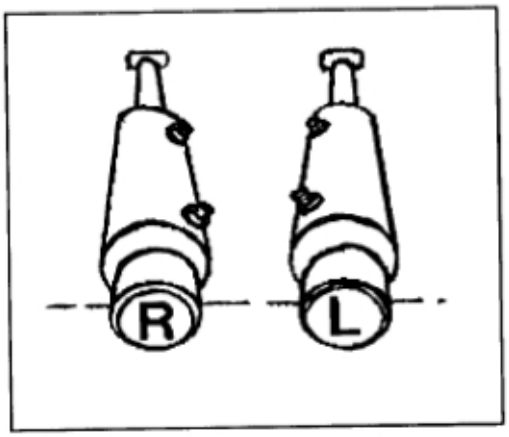

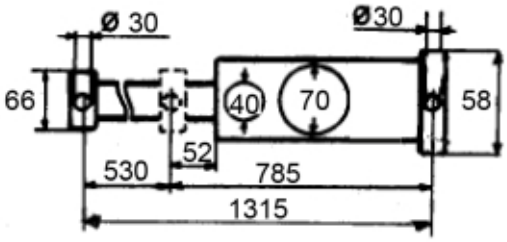

© 2025 Jost

Description	Ø 70/40 mm
Part assemblies	Cylinder LH
Specification	Year To: 12/31/2001 12:00:00 AM

PartNo	Pos	Qty	Name	Specifications
730011	1	1	Bearing	
680012	2	1	Piston	
737023	3	1	Piston rod	(7 37 013)
5018515	4	4	Bushing	D30 L=20
5016621	7	1	Retaining ring	
5016669	8	1	Retaining ring	
5036156		1	Seal kit	D70/40
5038101	12	1	• Wiper	40/50x7/10
5038284	13	1	• Piston seal	
5038254	14	1	• Seal	40/50x10
5038404	15	1	• Support Ring	
5037405	16	1	• O-ring	
5037243	17	1	• O-ring	63,09x3,53

© 2025 Jost