R 765010_766010

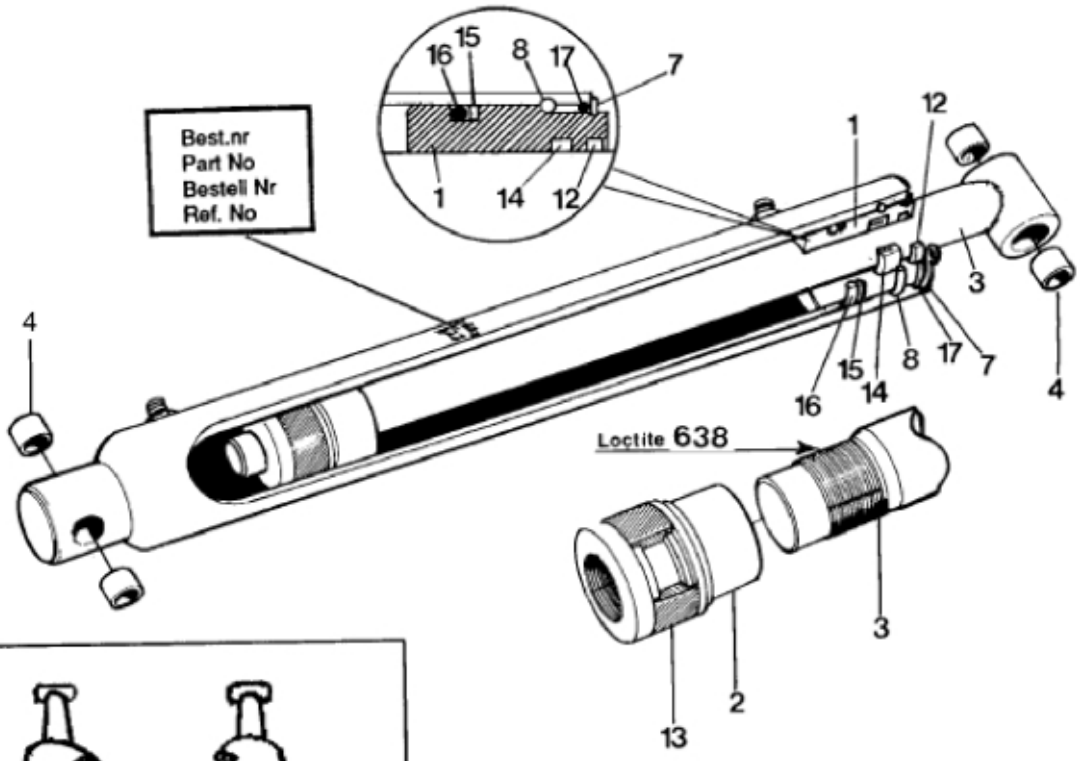

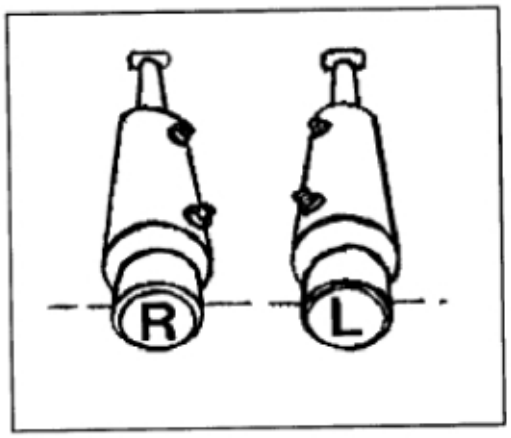

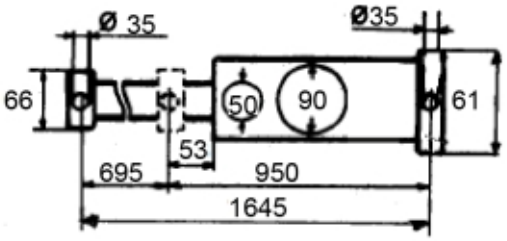

© 2025 Jost

Description	Ø 90/50 mm
Part assemblies	Cylinder LH
Specification	Specification: 90/50

PartNo	Pos	Qty	Name	Specifications
765011	1	1	Bearing	
712012	2	1	Piston	
765023	3	1	Piston rod	(7 65 013)
5018514	4	4	Bushing	D35 L=20
5016619	7	1	Retaining ring	
5016666	8	1	Retaining ring	
5036165		1	Seal kit	90/50
5038104	12	1	• Wiper	50/60 x 7/10
5038288	13	1	• Piston seal	
5038256	14	1	• Seal	50/60 x 10
5038406	15	1	• Support Ring	
5037409	16	1	• O-ring	
5037240	17	1	• O-ring	82,14 x 3,53

© 2025 Jost