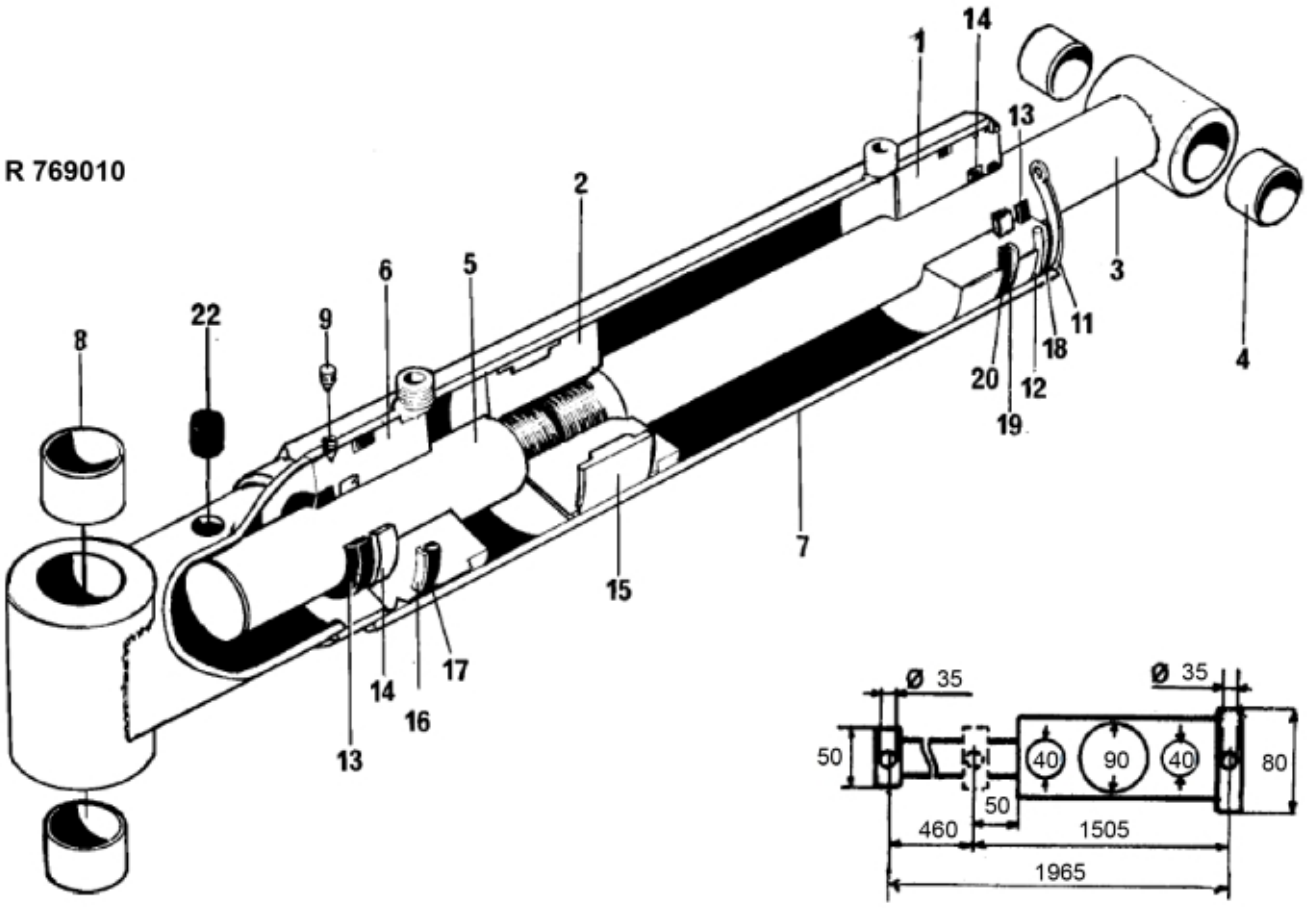
R 769010
1
14
13
2
3
4
6
5
9
22
8
11
18
20
12
19
7
15
17
14
16
13
Ø 35
Ø 35
50
40
90
40
80
50
460
1505
1965

© 2025 Jost

Description	Ø 90/40/40 mm
Part assemblies	Cylinder

PartNo	Pos	Qty	Name	Specifications
725011	1	1 PCS	Bearing	LH
712012	2	1	Piston	
763023	3	1	Piston rod	(7 63 013)
5018514	4	2	Bushing	D35 L=20
709015	5	1 PCS	Rear rod	
769020	6	1 PCS	Guide	
769024	7	1 PCS	Cylinder	(7 69 014)
5018514	8	2	Bushing	D35 L=20
5005446	9	2	Stop screw	S6SS M6x6
5016619	11	1	Retaining ring	
5016666	12	1	Retaining ring	
5036166		1	Seal kit	
5038101	13	2	• Wiper	40/50x7/10
5038254	14	2	• Seal	40/50x10
5038288	15	1	• Piston seal	
5038406	16	1	• Support Ring	
5037409	17	1	• O-ring	
5037468	18	1 PCS	• O-ring	
5038430	19	1 PCS	• Support Ring	
5037240	20	1	• O-ring	82,14 x 3,53
5022095	22	1	• Plug	

© 2025 Jost