R 781010_782010

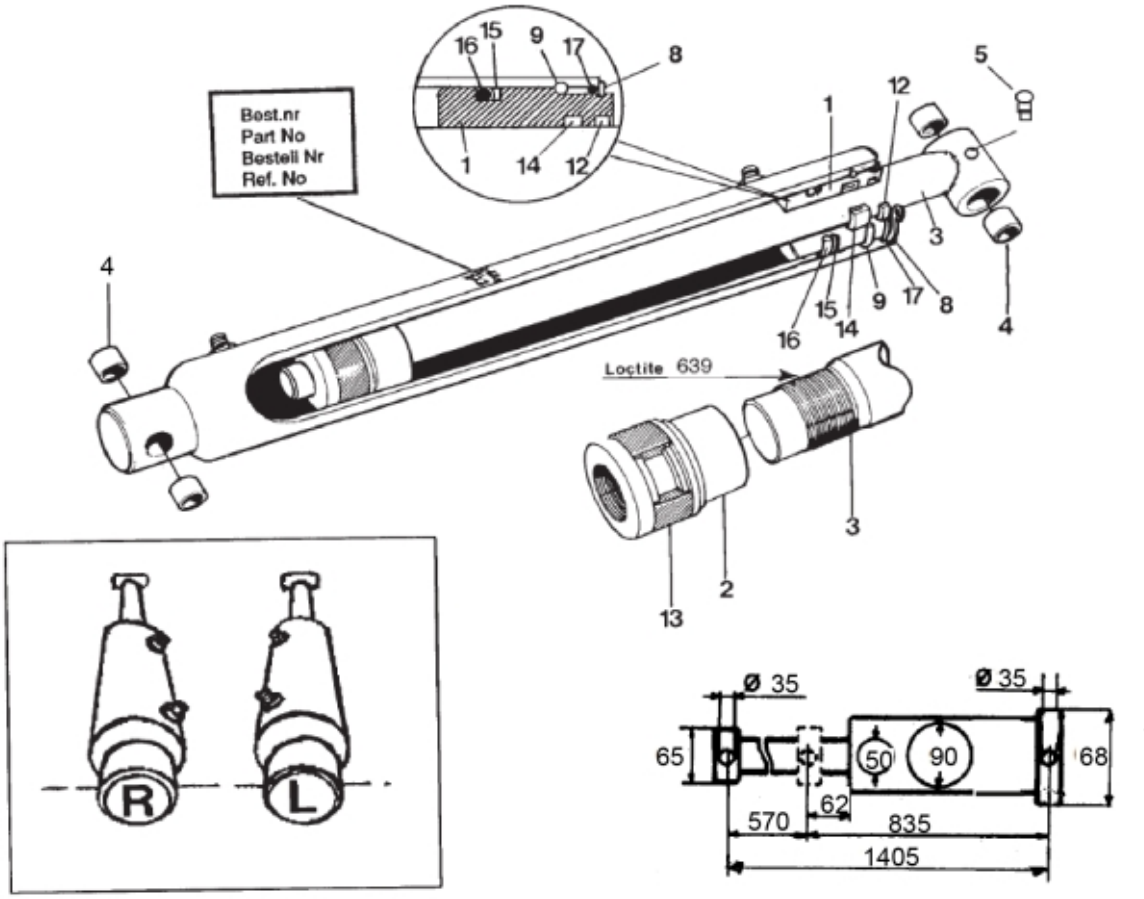

© 2025 Jost

Description	Ø 90/50 mm
Part assemblies	Cylinder LH
Specification	Year To: 12/31/2001 12:00:00 AM

PartNo	Pos	Qty	Name	Specifications
765011	1	1	Bearing	
712012	2	1	Piston	
781023	3	1	Piston rod	(7 81 013)
5018514	4	4	Bushing	D35 L=20
5023005	5	1	Greaser	M 10 x 1
5016619	8	1	Retaining ring	
5016666	9	1	Retaining ring	
5036165		1	Seal kit	90/50
5038104	12	1	• Wiper	50/60 x 7/10
5038288	13	1	• Piston seal	
5038256	14	1	• Seal	50/60 x 10
5038406	15	1	• Support Ring	
5037240	16	1	• O-ring	82,14 x 3,53
5037409	17	1	• O-ring	

© 2025 Jost