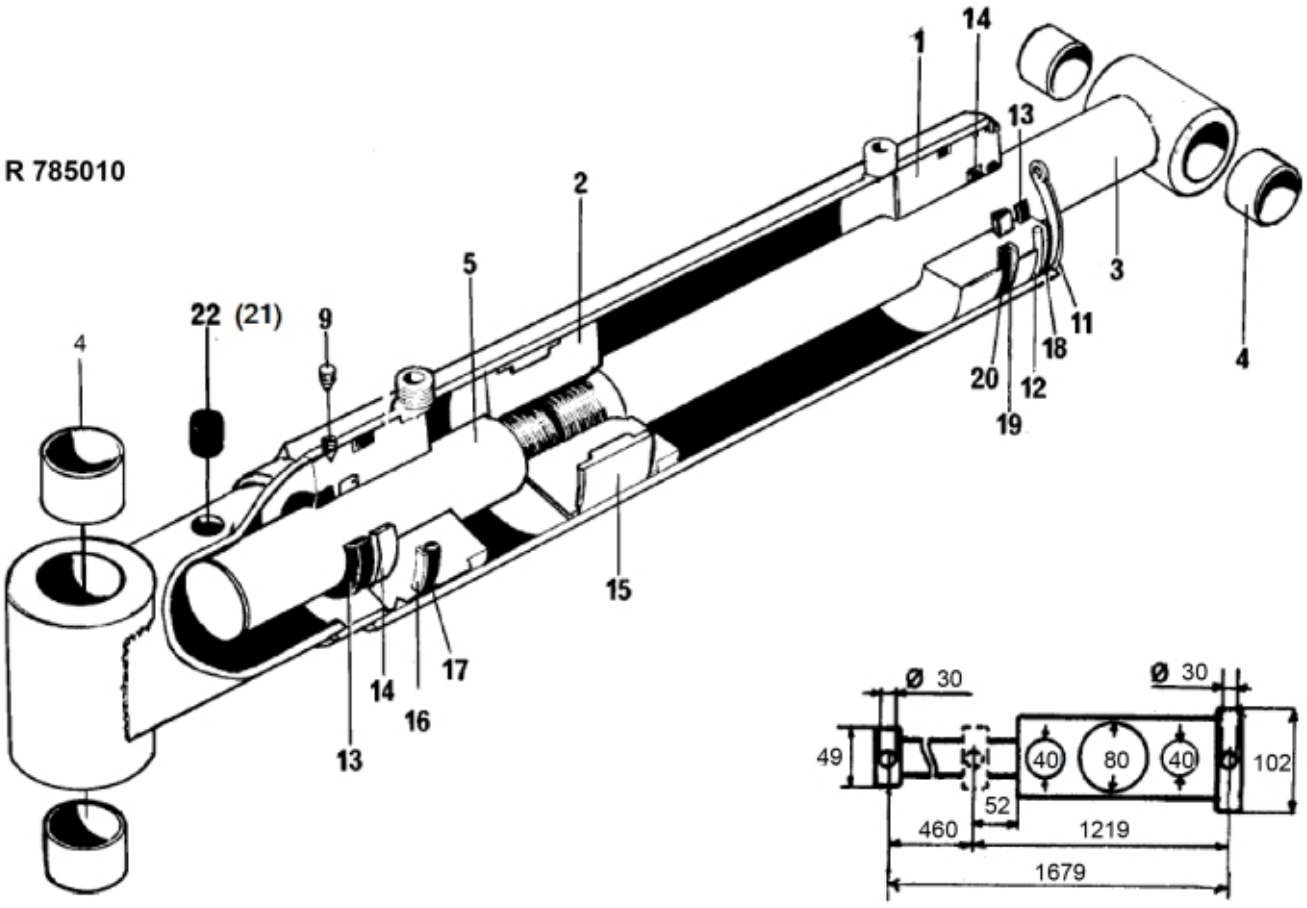
R 785010
1
14
13
2
5
3
22 (21)
9
4
11
18
20
12
19
4
15
17
14
16
13
Ø 30
Ø 30
49
40
80
40
102
52
460
1219
1679

© 2025 Jost

Description	Ø 85/40/40 mm
Part assemblies	Cylinder
Specification	Year To: 12/31/2001 12:00:00 AM

PartNo	Pos	Qty	Name	Specifications
724011	1	1	Bearing	
12708012	2	1	Piston	D80
12708023	3	1	Piston rod	
5018515	4	4	Bushing	D30 L=20
709015	5	1 PCS	Rear rod	
5005446	9	2	Stop screw	S6SS M6x6
5016620	11	1	Retaining ring	
5016667	12	1	Retaining ring	
5036161		1	Seal kit	80/40/40
5038101	13	2	• Wiper	40/50x7/10
5038254	14	2	• Seal	40/50x10
5038285	15	1	• Piston seal	
5038422	16	1 PCS	• Support Ring	
5037467	17	1 PCS	• O-ring	
5037241	18	1	• O-ring	72,62 x 3,53
5038405	19	1	• Support Ring	
5037407	20	1	• O-ring	
5037237	21	1 PCS	• O-ring	
5022095	22	1	• Plug	

© 2025 Jost