R 799010

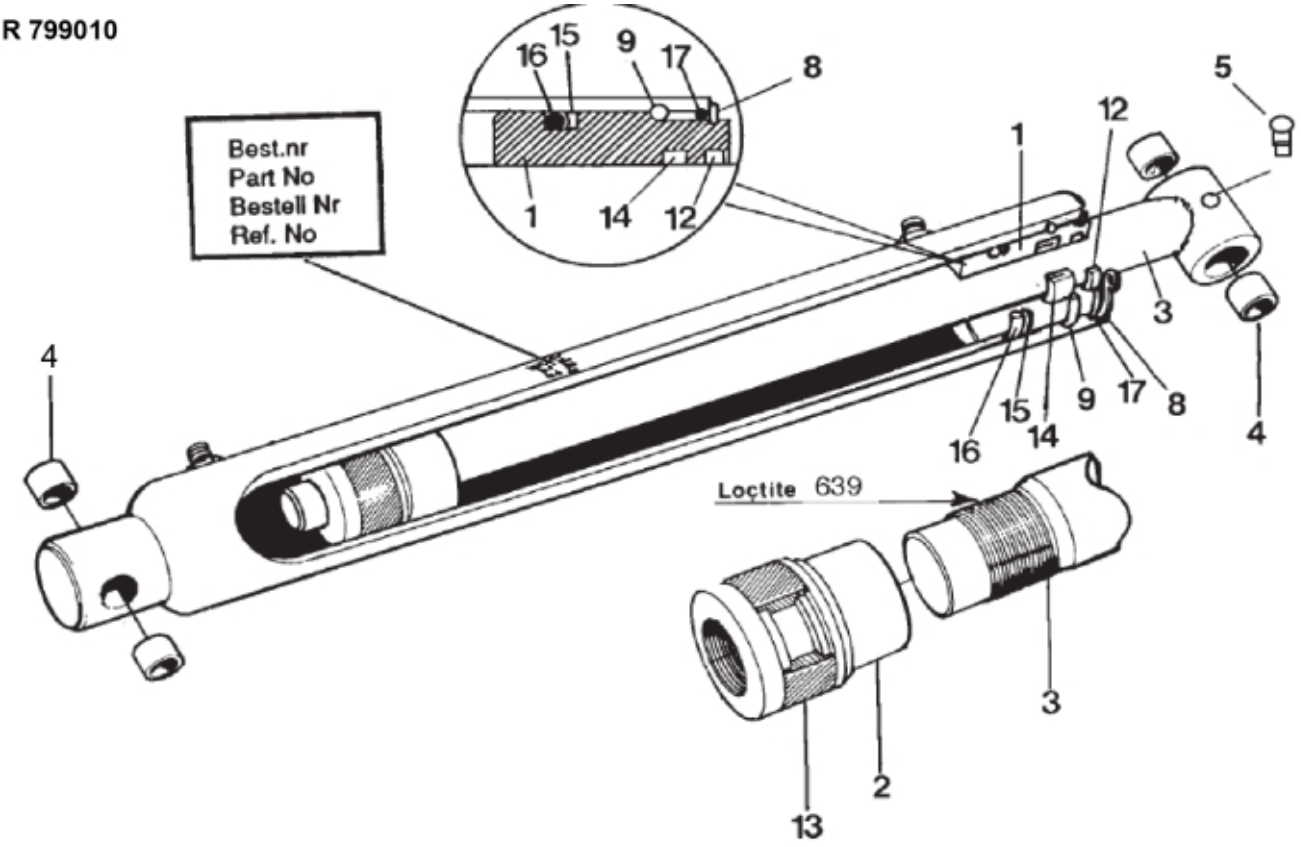


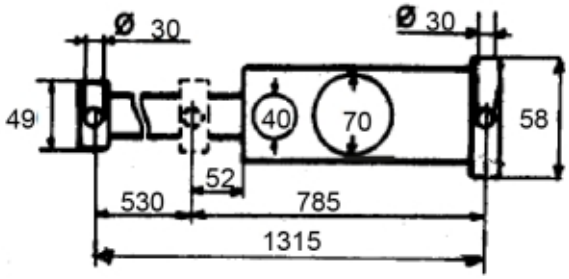



© 2025 Jost

| | |
|---|---|
| **Description** | Ø 70/40 mm |
| **Part assemblies** | Cylinder |
| **Specification** | Year To: 12/31/2001 12:00:00 AM |

| PartNo | Pos | Qty | Name | Specifications |
|---|---|---|---|---|
| 730011 | 1 | 1 | Bearing | |
| 707012 | 2 | 1 | Piston | |
| 758023 | 3 | 1 | Piston rod | (758013) |
| 5018515 | 4 | 4 | Bushing | D30 L=20 |
| 5023005 | 5 | 1 | • Greaser | M 10 x 1 |
| 5016621 | 8 | 1 | Retaining ring | |
| 5016669 | 9 | 1 | Retaining ring | |
| 5036156 | | 1 | Seal kit | D70/40 |
| 5038101 | 12 | 1 | • Wiper | 40/50x7/10 |
| 5038284 | 13 | 1 | • Piston seal | |
| 5038254 | 14 | 1 | • Seal | 40/50x10 |
| 5038404 | 15 | 1 | • Support Ring | |
| 5037405 | 16 | 1 | • O-ring | |
| 5037243 | 17 | 1 | • O-ring | 63,09x3,53 |


© 2025 Jost