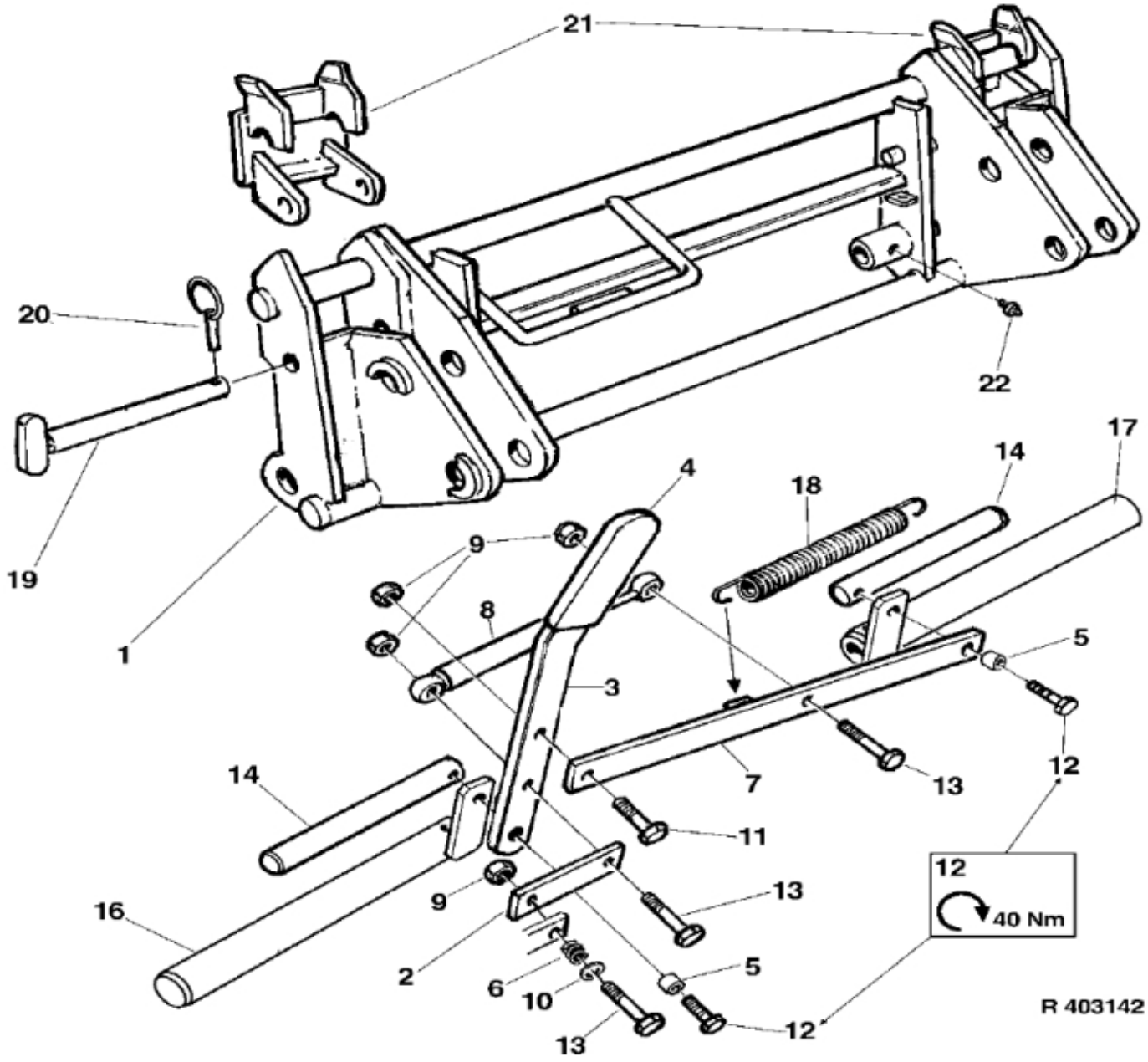
21
20
22
19
1
4
18
14
17
9
8
3
5
12
7
13
14
11
12
40 Nm
9
13
16
2
6
10
5
12
13
R 403142

© 2025 Jost

Description	Combi (US) Euro/Valtra (8+6)
Part assemblies	Tool carrier
Specification	Specification: Glossy Black
	Year From: 1/1/2002 12:00:00 AM

PartNo	Pos	Qty	Name	Specifications
5201160	1	1 PCS	Frame	
246658	2	1 PCS	Stay	
5201199	3	1	Locking Handle	
5022144	4	1	Cover	
5201211	5	2 PCS	Spacer Sleeve	
1101034	6	1 PCS	Spring	
5201205	7	1 PCS	Stay	
5020628	8	1 PCS	Gas spring	
5013110	9	4	Washer	BRB 10.5x22x2
5013110	10	1	Washer	BRB 10.5x22x2
5002078	11	1	Screw	M6S 10x40 (8.8)
5002079	12	2	Screw	M6S 10x50
5002079	13	3	Screw	M6S 10x50
1116673	14	2 PCS	Latch Bolt	Ø 20 x 207
5016960	16	1 PCS	Latch Bolt	(Left)
6016961	17	1	Latch Bolt	(Right)
1101035	18	1	Spring	
1116697	19	2 PCS	Latch Bolt	
1102001	20	2	Linch pin	
269672	21	2 PCS	Adapter	(Valtra)
5023005	22	4	Greaser	M 10 x 1

© 2025 Jost