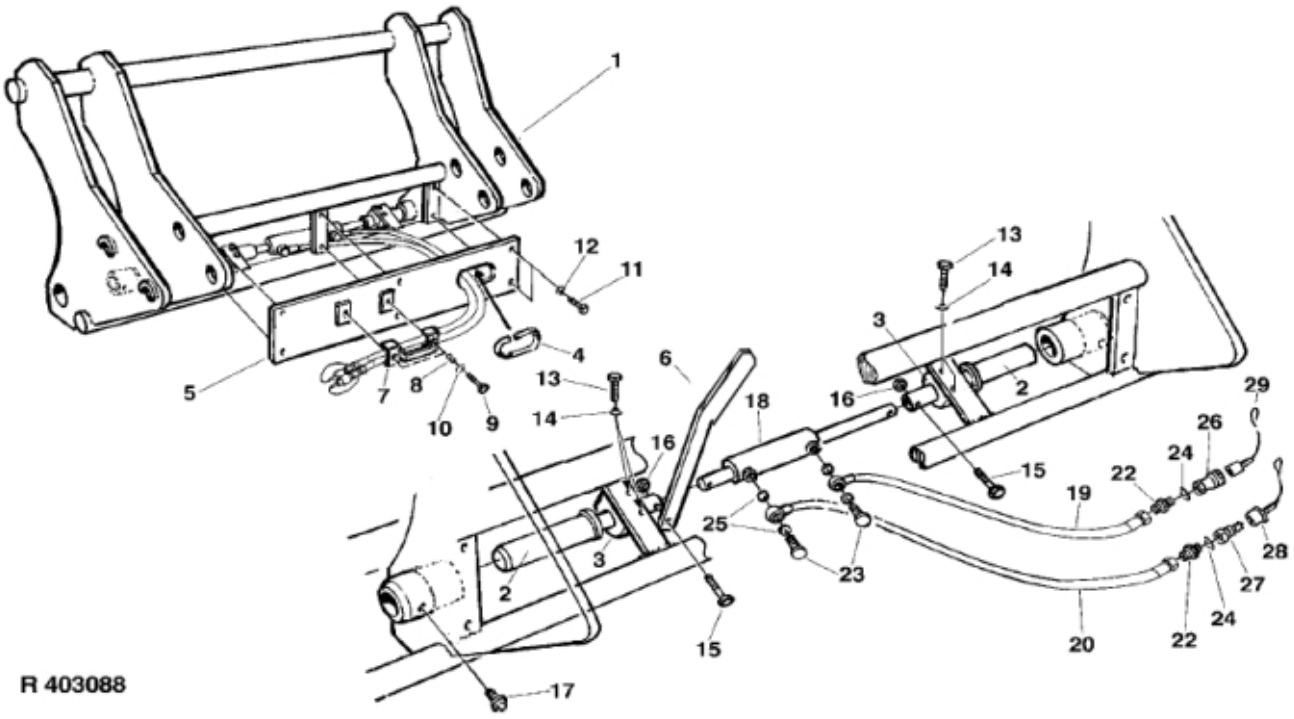
1
12
11
4
5
7
8
10
9
13
14
6
16
18
3
2
15
19
22
24
26
29
25
23
28
27
20
17
R 403088

© 2025 Jost

Description	VOLVO BM (9) with Hydr. Implement Locking
Part assemblies	Tool carrier
Specification	Year From: 1/1/2002 12:00:00 AM

PartNo	Pos	Qty	Name	Specifications
269701	1	1 PCS	Frame	
1116689	2	2	Locking Pin	□ 50
269708	3	2 PCS	Guide sleeve	
5022051	4	1 M	Rubber moulding	
279698	5	1 PCS	Cover plate	
5201190	6	1 PCS	Indicator (lever)	
145114	7	1 PCS	Hose clamp	
1101019	8	2 PCS	Spring	
5002056	9	2	Screw	M6S 8 x 50
5011554	10	2	Nut	Loc-King M10
5002051	11	6	Screw	M6S 8 x 20
5011554	12	6	Nut	Loc-King M10
5002076	13	4	Screw	M6S M10 x 20 (8.8)
5013102	14	4	Washer	BRB 10 x 18 x 2
5004087	15	2 PCS	Screw	M10x60
5011554	16	2	Nut	Loc-King M10
5023005	17	2	Greaser	M 10 x 1
802010	18	1	Cylinder	Ø50/25 L=352-532 Lock cyl.
1103145	19	1 PCS	Hydraulic hose	1/4" x 800 x Sp
1103467	20	1 PCS	Hydraulic hose	1/4" x 1000 x Sp
1120110	22	2 PCS	Adaptor	R 1/2" - R 1/4"
1120166	23	2	Banjo fitting	R1/4"
5013604	24	2	Washer	Copper 21x28x2
5013613	25	4 PCS	Washer	Ø 13,3/18,9 x 1,5 Cu
5044127	26	1	Quick Coupling	1/2", Part is included in kit 60007907 Hose cpl., 9032177 Hose cpl.
5044128	27	1	Quick Coupling	ISO-A Plug 1/2"
5044129	28	1	Dust Cover	1/2" Male
5044130	29	1	Dust Cover	Part is included in kit 60007907 Hose cpl., 9032177 Hose cpl.
5024380		1 PCS	Switch	

© 2025 Jost