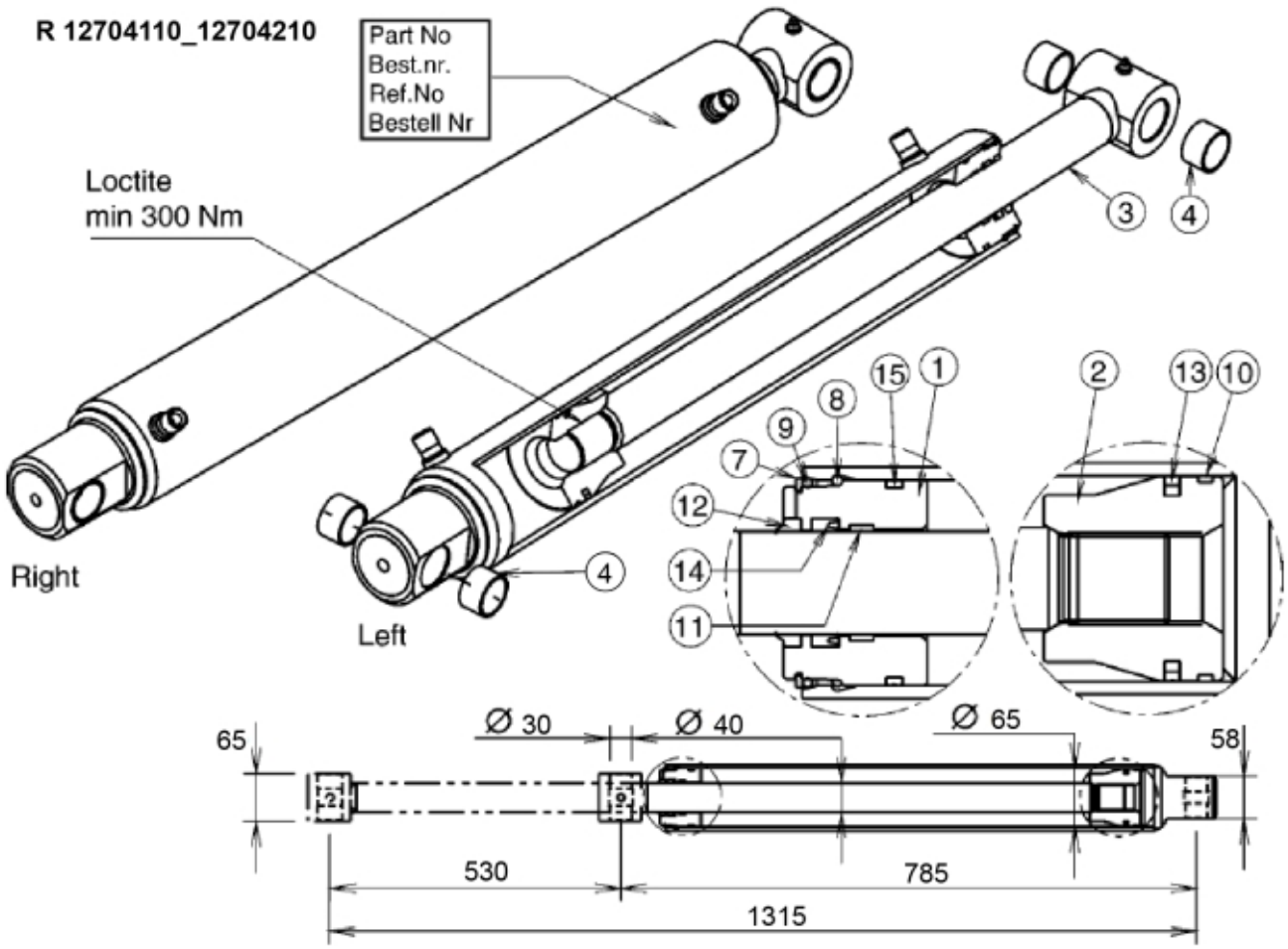
R 12704110_12704210
Part No
Best.nr.
Ref.No
Bestell Nr
Loctite
min 300 Nm
Right
Left
3
4
4
15
1
8
9
7
12
14
11
2
13
10
65
Ø 30
Ø 40
Ø 65
58
530
785
1315

© 2025 Jost

Description	Ø 65/40 mm
Part assemblies	Cylinder
Specification	Year From: 1/1/2002 12:00:00 AM

PartNo	Pos	Qty	Name	Specifications
12706511	1	1	Bearing	D65/40
12706512	2	1	Piston	
12703723	3	1	Piston rod	
5018515	4	4	Bushing	D30 L=20
5016608	7	1	Circlip	
5016668	8	1	Retaining ring	
5033703		1	Seal kit	
5037242	9	1	• O-ring	58,74 x 3,53
5040012	10	1	• Guide ring	65/60 x 5,5
5040010	11	1	• Guide ring	40/45x9,7
5038101	12	1	• Wiper	40/50x7/10
5040022	13	1	• Piston seal	65/49,5 x 6,3
5038254	14	1	• Seal	40/50x10
5039002	15	1	• Cover seal	65 x 59,6 x 6,2

© 2025 Jost