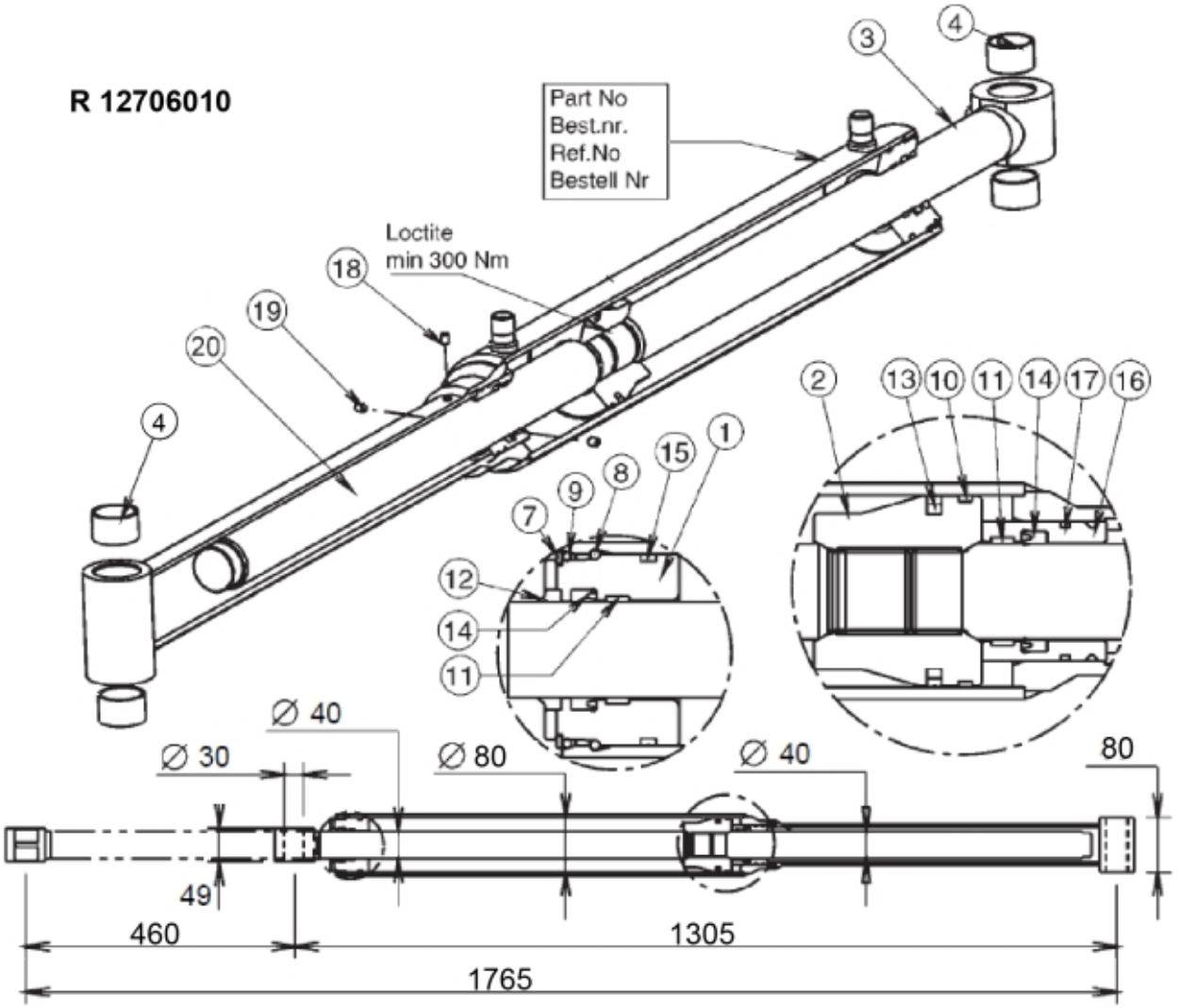
R 12706010
Part No
Best.nr.
Ref.No
Bestell Nr
Loctite
min 300 Nm
18
19
20
4
3
4
2
13
10
11
14
17
16
1
15
8
9
7
12
14
11
∅ 40
∅ 30
∅ 80
∅ 40
80
49
460
1305
1765

© 2025 Jost

Description	Ø 80/40/40 mm
Part assemblies	Cylinder
Specification	Year From: 1/1/2002 12:00:00 AM

PartNo	Pos	Qty	Name	Specifications
12708011	1	1	Bearing	D80/40
12708012	2	1	Piston	D80
12704923	3	1	Piston rod	
5018515	4	4	Bushing	D30 L=20
5016620	7	1	Retaining ring	
5016667	8	1	Retaining ring	
12700017	16	1	Guide	
5005984	19	2	Stop screw	S6SS M6x8
12700915	20	1	Rear rod	
5033714		1	Seal kit	
5037241	9	1	• O-ring	72,62 x 3,53
5040015	10	1	• Guide ring	80/75 x 5,5
5040010	11	2	• Guide ring	40/45x9,7
5038101	12	1	• Wiper	40/50x7/10
5040025	13	1	• Piston seal	80/64,5 x 6,3
5038254	14	2	• Seal	40/50x10
5039005	15	1	• Cover seal	80 x 73,6 x 6,4
5039001	17	1	• Seal kit	58 x 53.4 x 4.1
5022095	18	1	• Plug	

© 2025 Jost