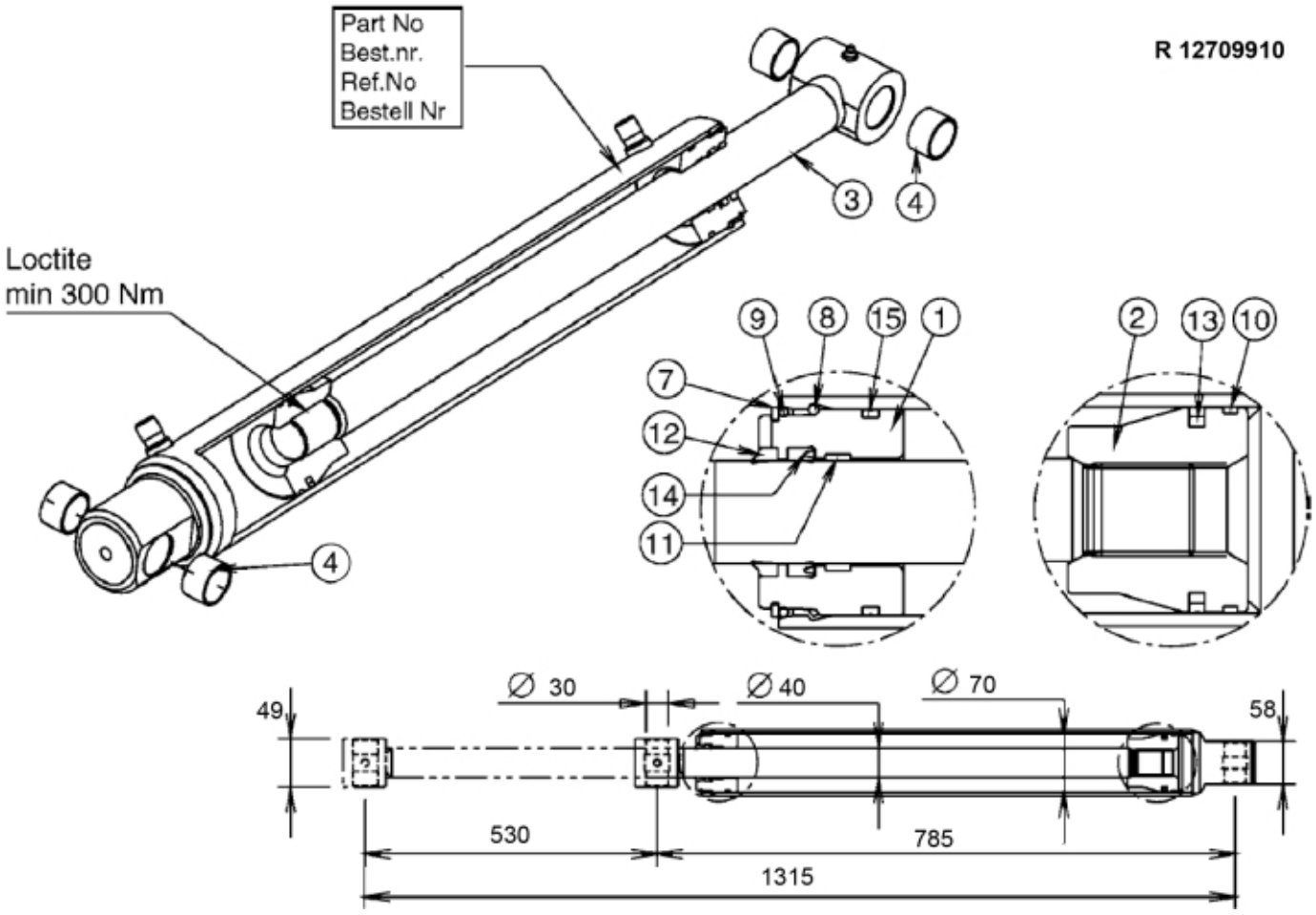
Part No
Best.nr.
Ref.No
Bestell Nr
R 12709910
Loctite
min 300 Nm
3
4
4
9
8
15
1
7
12
14
11
2
13
10
49
Ø 30
Ø 40
Ø 70
58
530
785
1315

© 2025 Jost

Description	Ø 70/40 mm
Part assemblies	Cylinder
Specification	Year From: 1/1/2002 12:00:00 AM

PartNo	Pos	Qty	Name	Specifications
12707011	1	1	Bearing	D70/40
12707012	2	1	Piston	D70
12705823	3	1	Piston rod	
5018515	4	4	Bushing	D30 L=20
5016621	7	1	Retaining ring	
5016669	8	1	Retaining ring	
5033704		1	Seal kit	
5037243	9	1	• O-ring	63,09x3,53
5040013	10	1	• Guide ring	70/65x5,5
5040010	11	1	• Guide ring	40/45x9,7
5038101	12	1	• Wiper	40/50x7/10
5040023	13	1	• Piston seal	70/54,5x6,3
5038254	14	1	• Seal	40/50x10
5039003	15	1	• Cover seal	70 x 64,6 x 6,2

© 2025 Jost