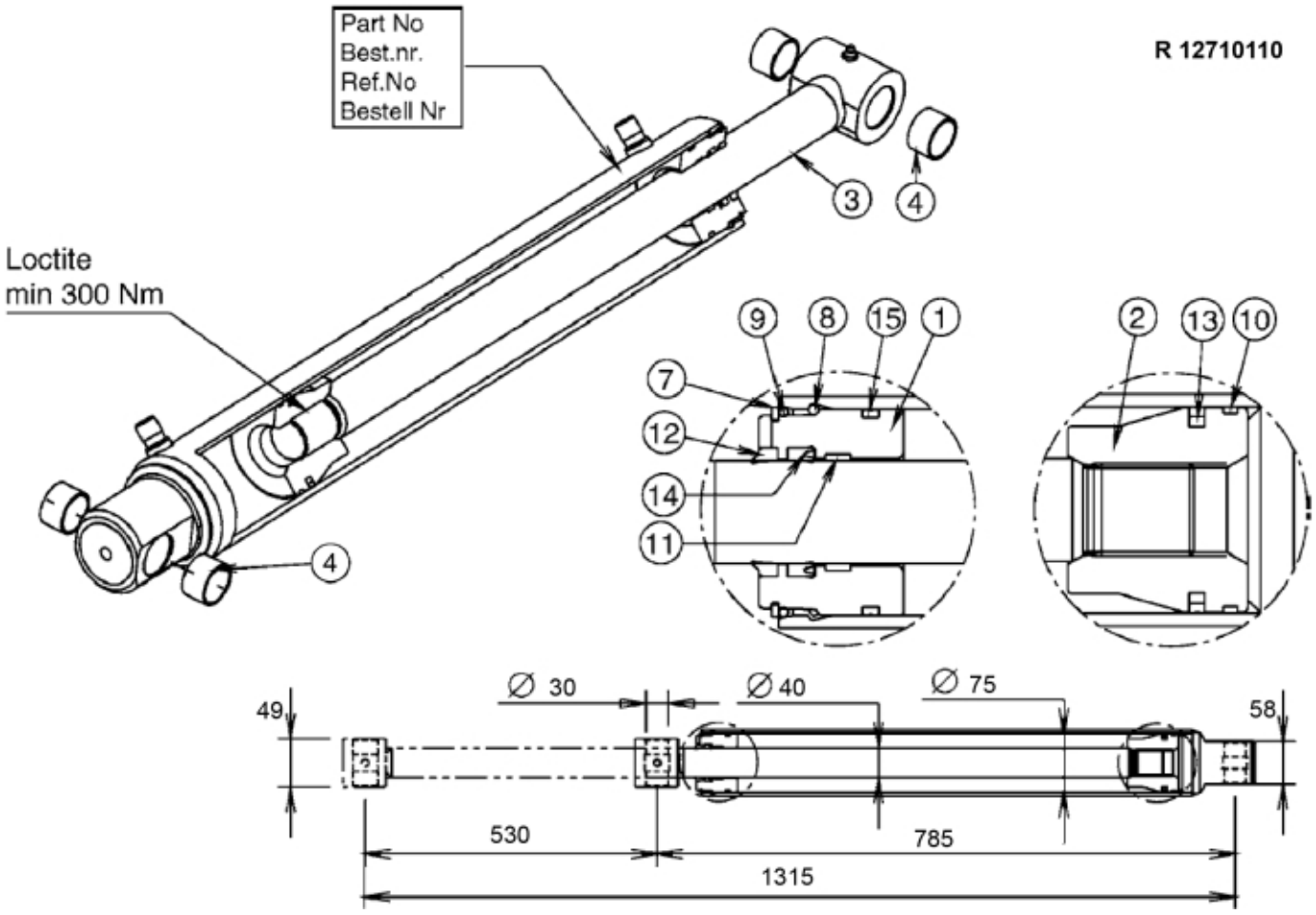
Part No
Best.nr.
Ref.No
Bestell Nr
R 12710110
Loctite
min 300 Nm
3
4
4
9
8
15
1
7
12
14
11
2
13
10
49
Ø 30
Ø 40
Ø 75
58
530
785
1315

© 2025 Jost

Description	Ø 75/40 mm
Part assemblies	Cylinder
Specification	Year From: 1/1/2002 12:00:00 AM

PartNo	Pos	Qty	Name	Specifications
12707511	1	1	Bearing	D75/40
12707512	2	1	Piston	D75
12705823	3	1	Piston rod	
5018515	4	4	Bushing	D30 L=20
5016618	7	1	Retaining ring	
5016665	8	1	Retaining ring	
5033705		1	Seal kit	
5037239	9	1	• O-ring	68.26x3x53
5040014	10	1	• Guide ring	75/70x5.5
5040010	11	1	• Guide ring	40/45x9,7
5038101	12	1	• Wiper	40/50x7/10
5040024	13	1	• Piston seal	75/59.5x6.3
5038254	14	1	• Seal	40/50x10
5039004	15	1	• Cover seal	75 x 69.6 x 6.2

© 2025 Jost