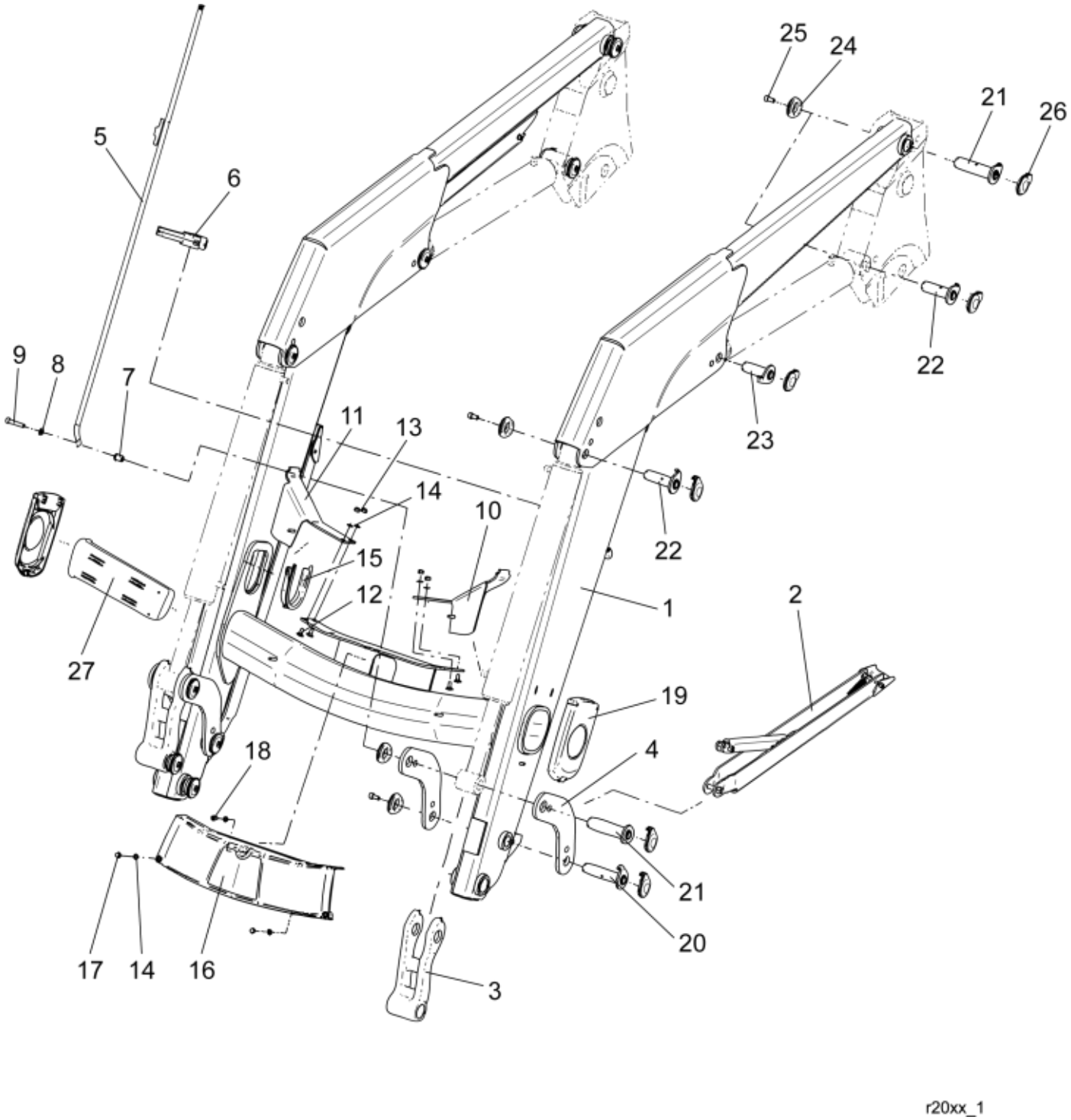

r20xx_1

© 2025 Jost

Part assemblies Loader beam

PartNo	Pos	Qty	Name	Specifications
5211780-19	1	1	Loader beam w. bushings	
5218004-19	2	2	Support leg	
60052805	3	2	Link w. bushings	Glossy Black
5214111-19	4	4	Link	MF Red
5215219	5	1	Indicator rod	
5215208	6	1	Holder kit	
5215227	7	1	Spacer	
5013110	8	1	Washer	BRB 10.5x22x2
5050605	9	1	Screw	MC6S 10x50 Loc
5211255	10	1	Bracket	
5211256	11	1	Bracket	
5006001	12	4	Screw	MVBF 8x20
5011553	13	4	Nut	M6M M8 Loc-king
5013101	14	5	Washer	BRB 8,4 x 16
5215101	15	2	Cover	
5215021	16	1	Cover	
5011910	17	2	Nut	
5002058	18	1	Screw	M6S 8x16
5215191	19	2	Cover	
60018046	20	2	Pivot Pin	D=30, L=127mm
60018053	21	4	Pivot Pin	D=35, L=127mm
60018047	22	4	Pivot Pin	D=30, L=96mm
60018050	23	2	Pivot Pin	D=30, L=84mm
5215131	24	16	Locking cover	
5050608	25	16	Screw	MC6S M10x20 Loc
5215121-1	26	16	Plastic cover	Glossy Black
5215181	27	1	Box	

© 2025 Jost