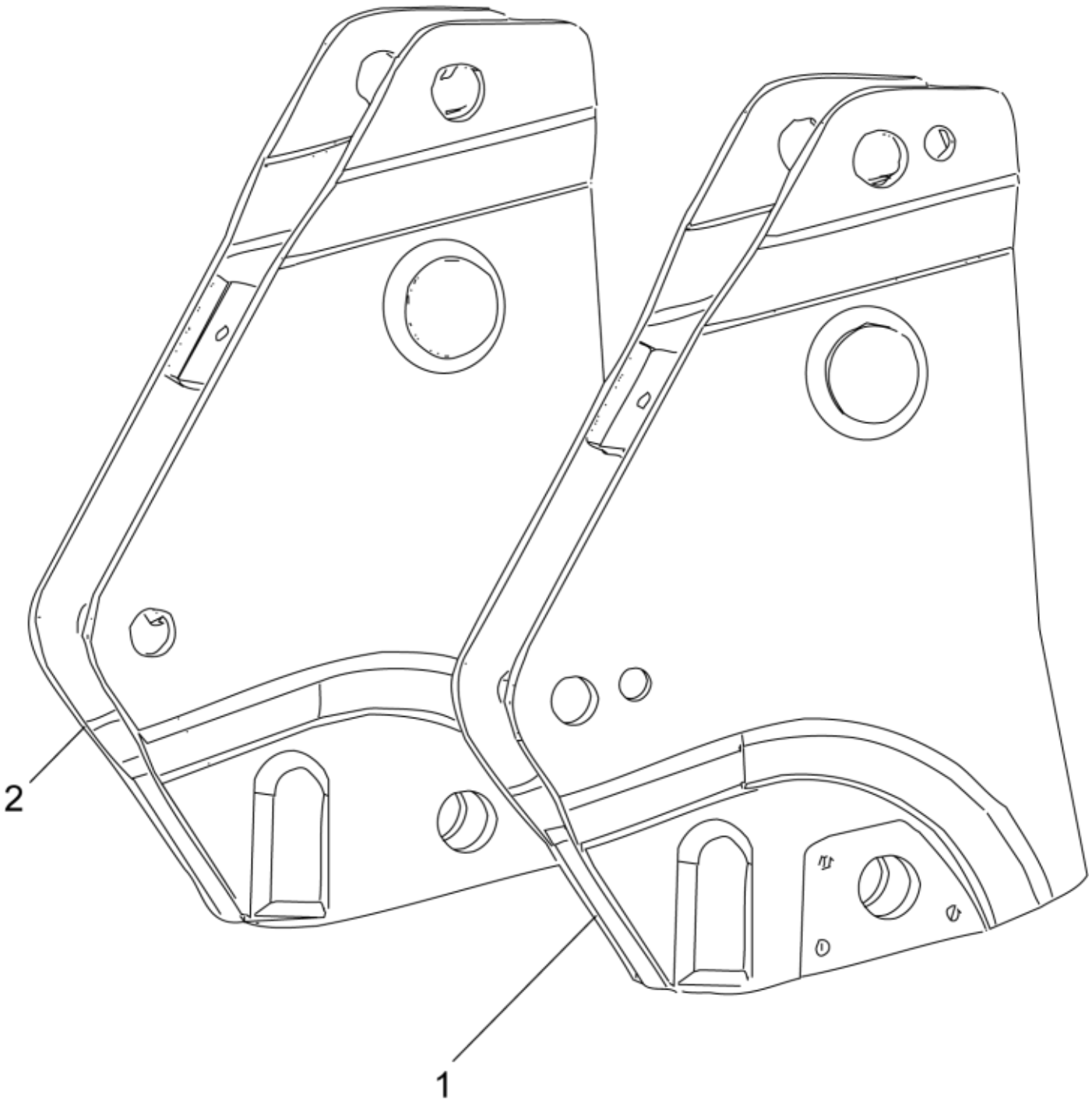

r5212514_5212524

© 2025 Jost

Part assemblies Bearing box

PartNo	Pos	Qty	Name	Specifications
5212515-19	1	1	Bearing box LH	MF Red
5212525-19	2	1	Bearing box RH	MF Red

© 2025 Jost