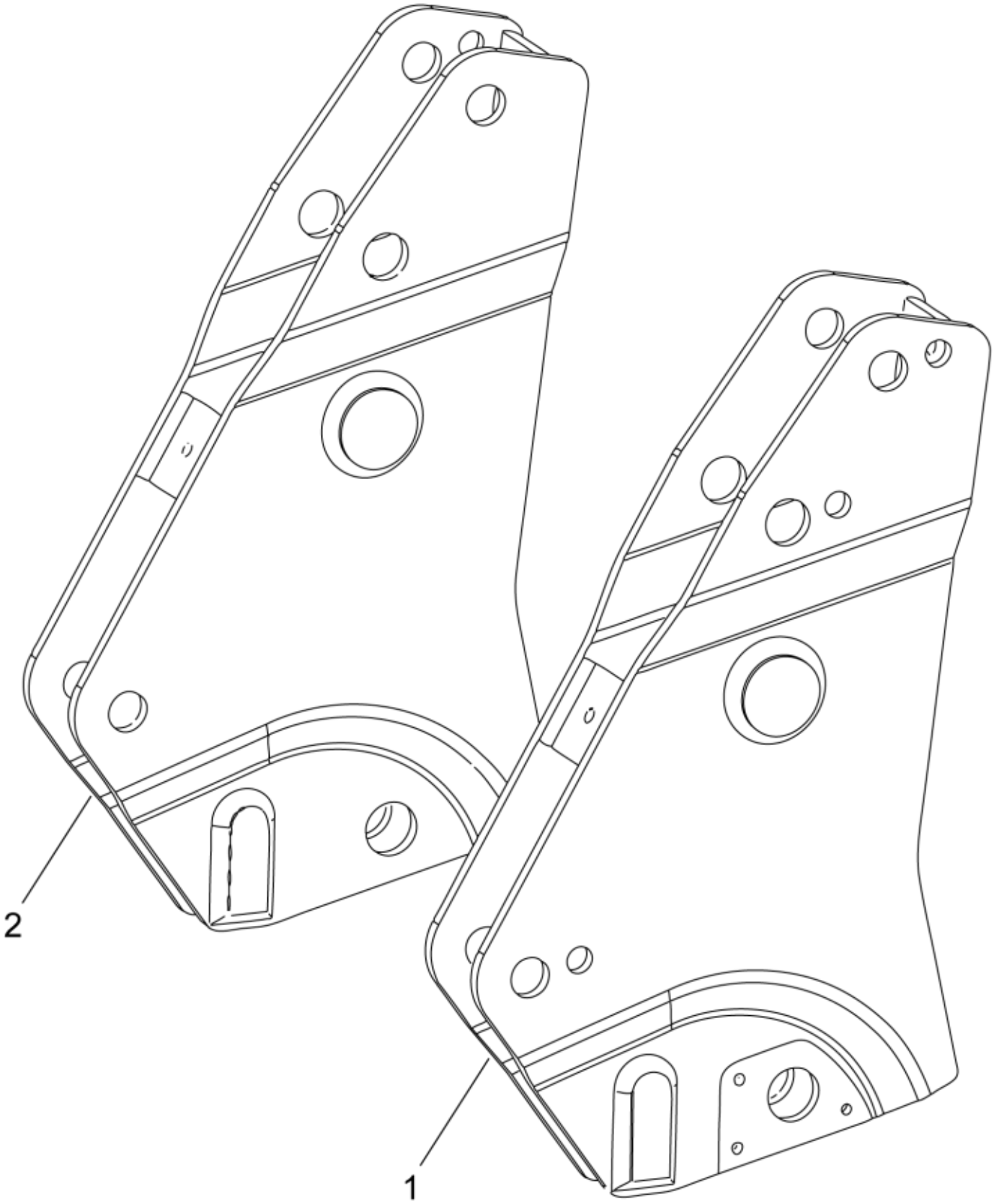

r5212513_5212523

© 2025 Jost

Part assemblies Bearing box

PartNo	Pos	Qty	Name	Specifications
5212511-19	1	1	Bearing box LH	MF Red
5212521-19	2	1	Bearing box RH	MF Red

© 2025 Jost