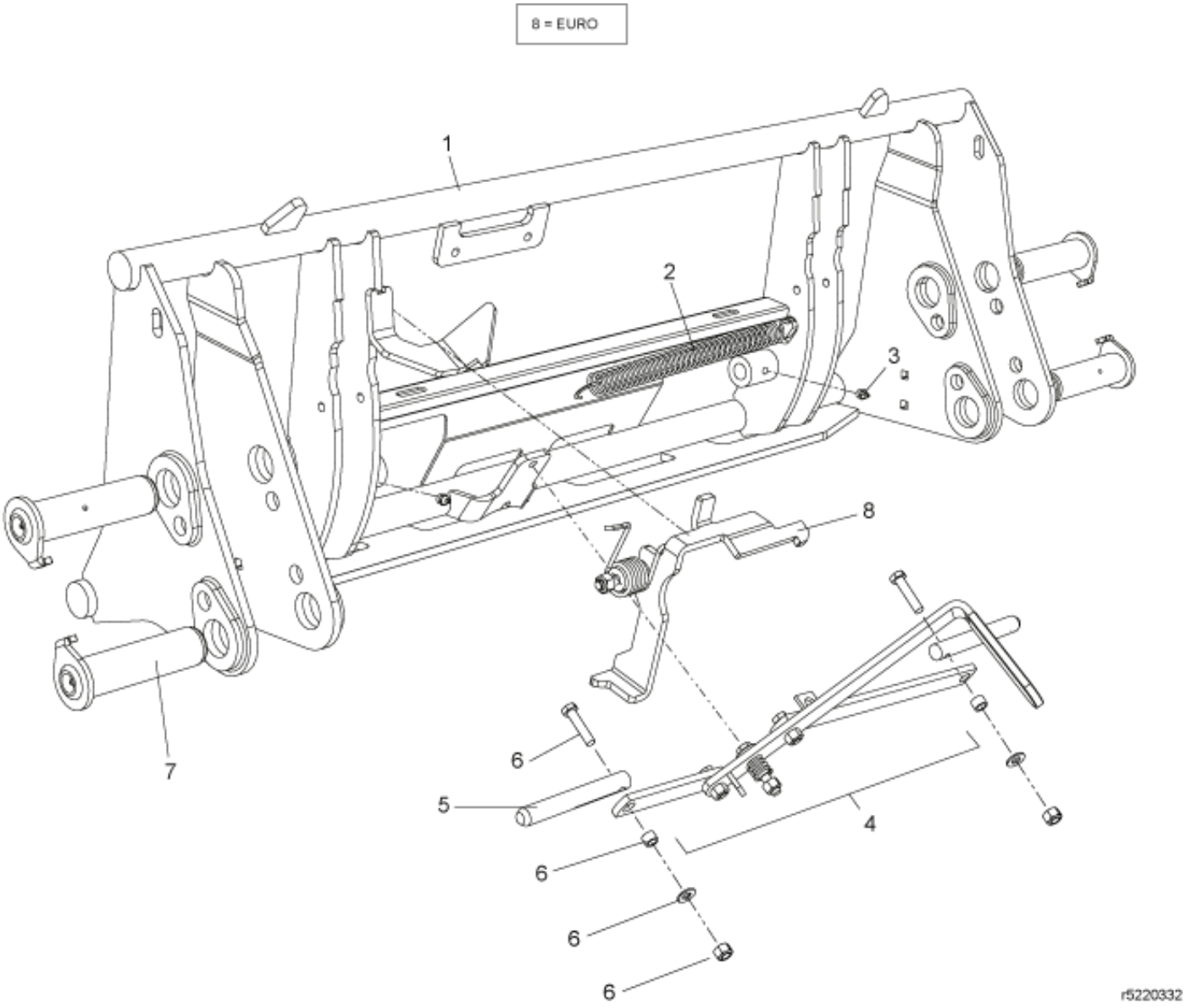

© 2025 Jost

Description	Tool carrier
Part assemblies	Euro DL
Specification	Serial number from: 7282198

PartNo	Pos	Qty	Name	Specifications
5220288-19	1	1	Tool carrier	MF Red
1101035	2	1	Spring	
5023005	3	2	Greaser	M 10 x 1
5220265	4	1	Lever kit	
4500859	5	2	Pin kit	Kit includes 1x Pin and 1x Screw kit
4500867	6	2	• Screw kit	Included in Pin kit
60021068	7	1 PCS	Pin kit	Replaces 9020072
4500321	8	1	Click-on	

© 2025 Jost