9 = Volvo BM (Stora)

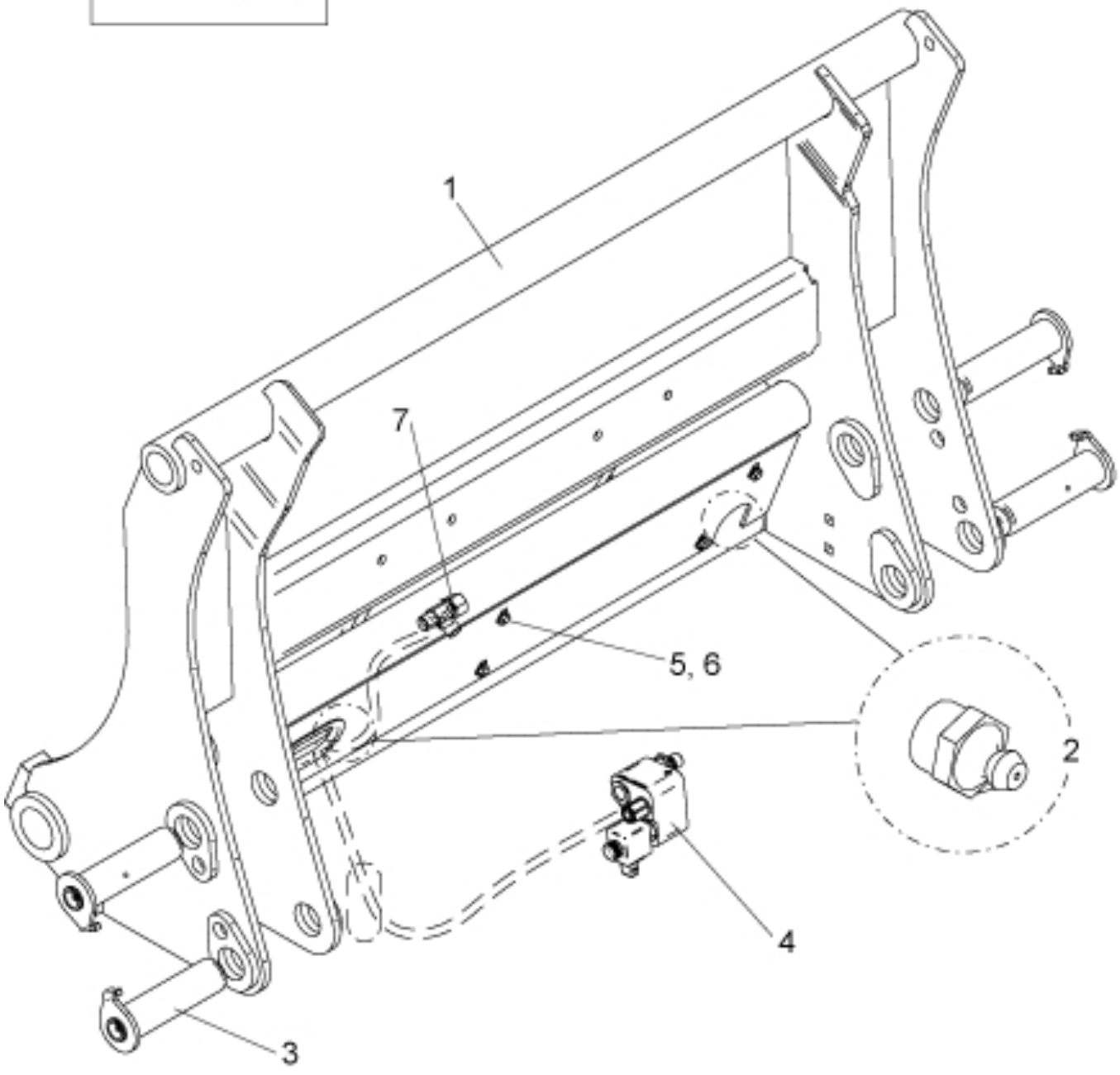


r5219073a


© 2025 Jost

| | |
|---|---|
| **Description** | Tool carrier |
| **Part assemblies** | Big BM |

| PartNo | Pos | Qty | Name | Specifications |
|---|---|---|---|---|
| 5219064-19 | 1 | 1 PCS | Tool carrier | MF Red |
| 5023005 | 2 | 2 | Greaser | M 10 x 1 |
| 60021068 | 3 | 1 PCS | Pin kit | Replaces 9020072 |
| 10550456 | 4 | 1 PCS | Valve | |
| 5002051 | 5 | 6 | Screw | M6S 8 x 20 |
| 5013101 | 6 | 6 | Washer | BRB 8,4 x 16 |
| 5027454 | 7 | 1 | L-coupling | |


© 2025 Jost