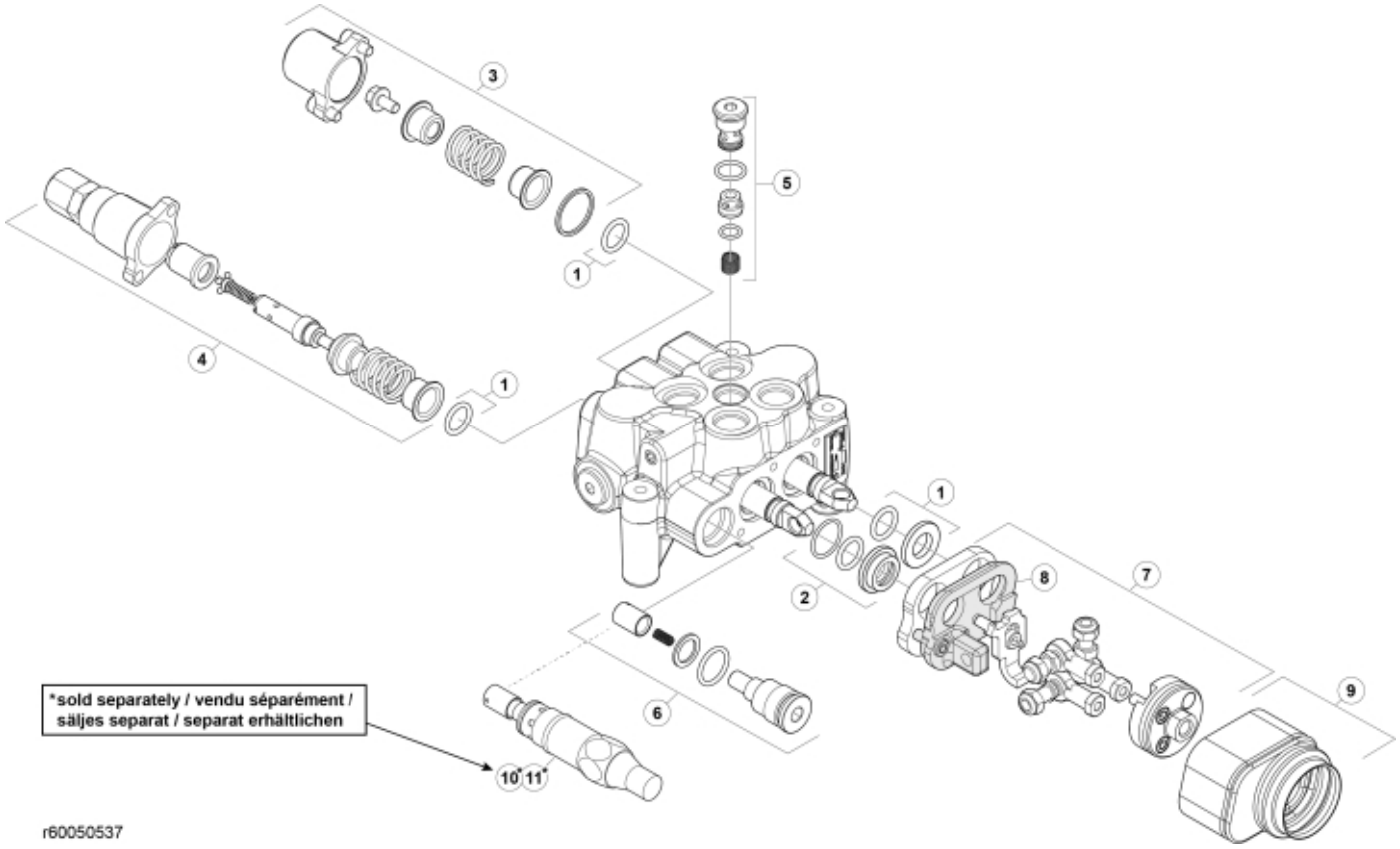
3
5
1
4
1
1
2
8
7
9
6
*sold separately / vendu séparément / säljes separat / separat erhältlichen
10*
11*
r60050537

© 2025 Jost

Part assemblies Control valve

PartNo	Pos	Qty	Name	Specifications
4500023	1	1	Seal kit	Tipo 11
4500024	2	1	Seal kit	Tipo 19
4500020	3	1	Spool control unit cpl.	
4500009	4	1	Spool control unit cpl.	
4500021	5	1	Valve	
4500019	6	1	Plug	
4501294	7	1	Joystick mechanism cpl.	
4501293	8	1	• Plate	
4501193	9	1	Bellows	
60053871	10	1	Relief valve cpl.	125 bar, Pre-installed Sold Separately
60054645	11	1	Relief valve cpl.	200 bar, Pre-installed Sold Separately

© 2025 Jost