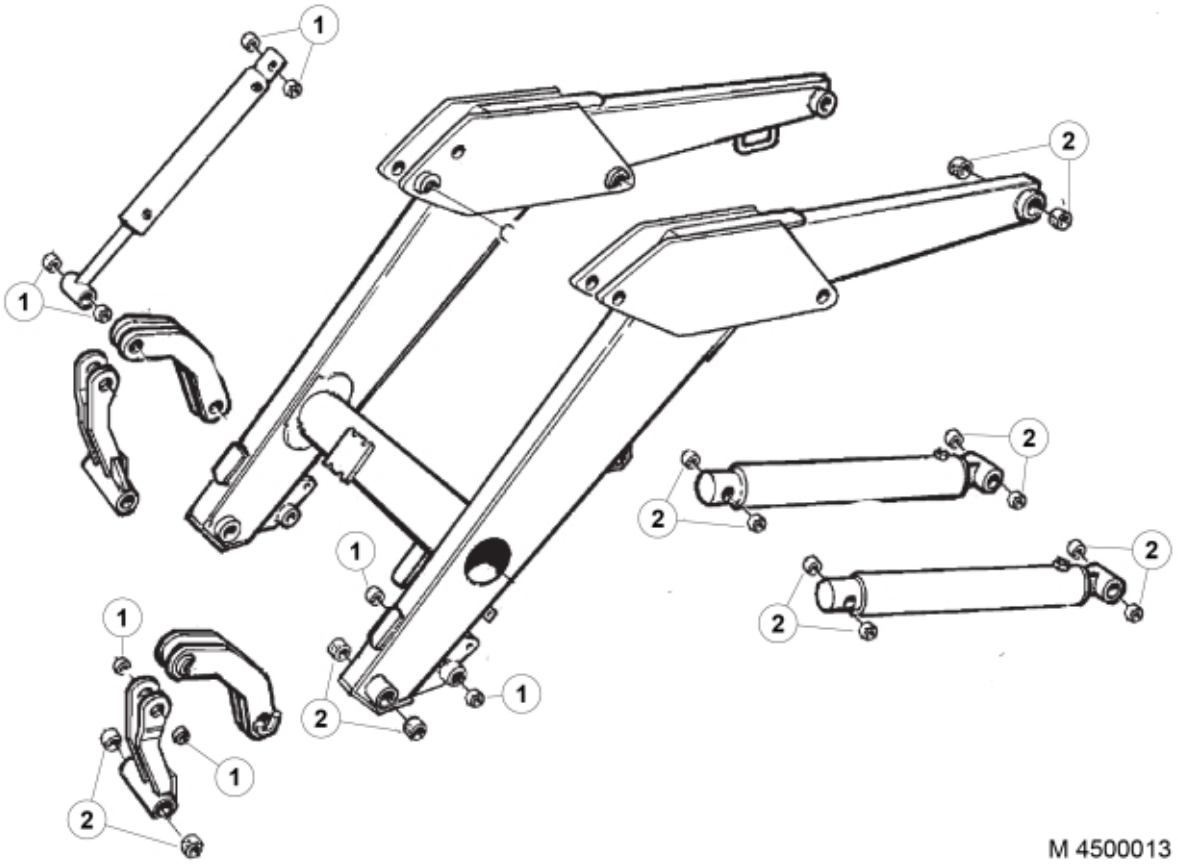

© 2025 Jost

Part assemblies	Bushing kit

PartNo	Pos	Qty	Name	Specifications
4500013		1 PCS	Bushing kit	
5018515	1	16	Bushing	D30 L=20
5018514	2	20	Bushing	D35 L=20

© 2025 Jost