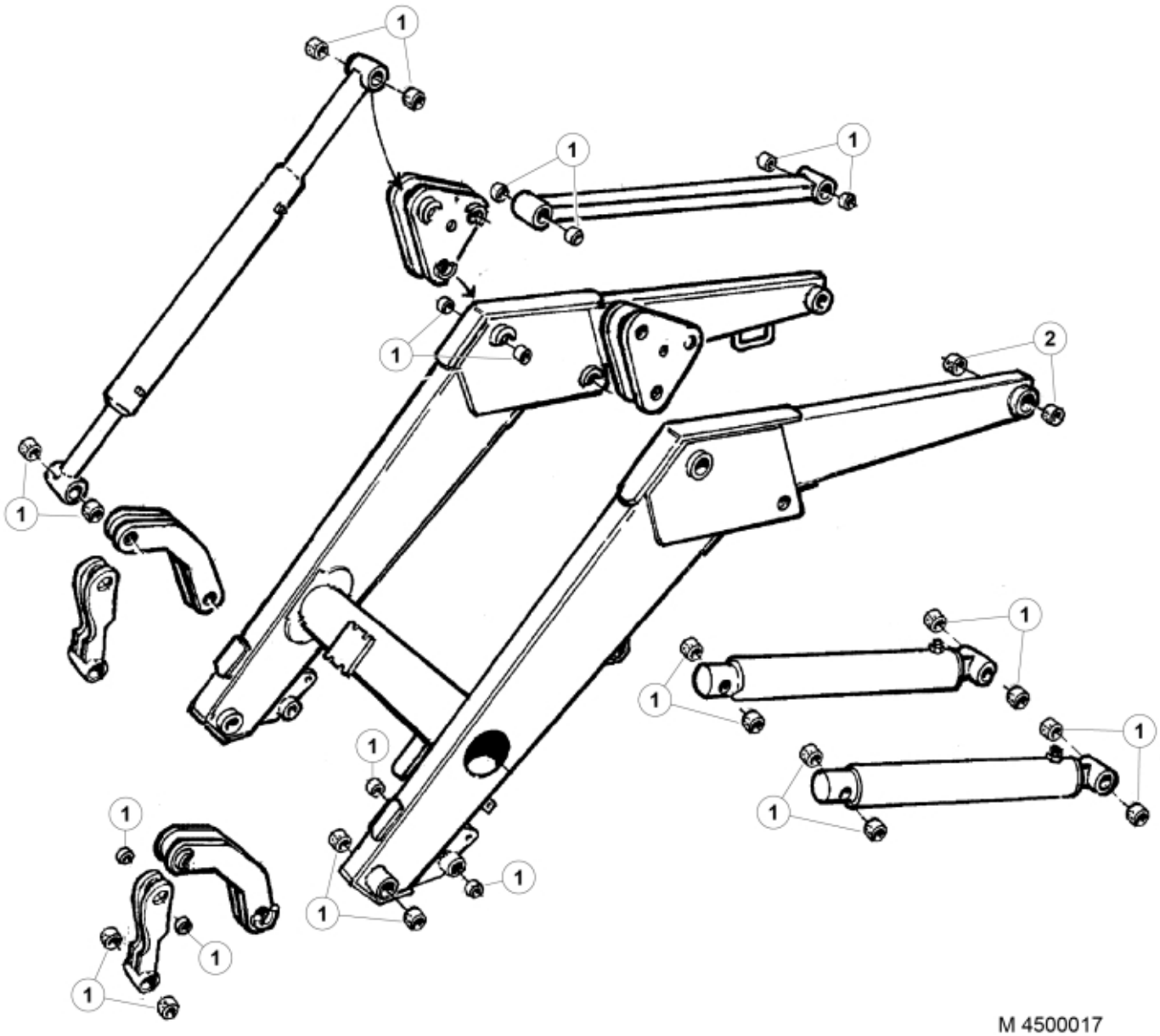

© 2025 Jost

Part assemblies	Bushing kit

PartNo	Pos	Qty	Name	Specifications
4500017		1 PCS	Bushing kit	
5018514	1	44	Bushing	D35 L=20
5018513	2	4	Bushing	D40 L=20

© 2025 Jost