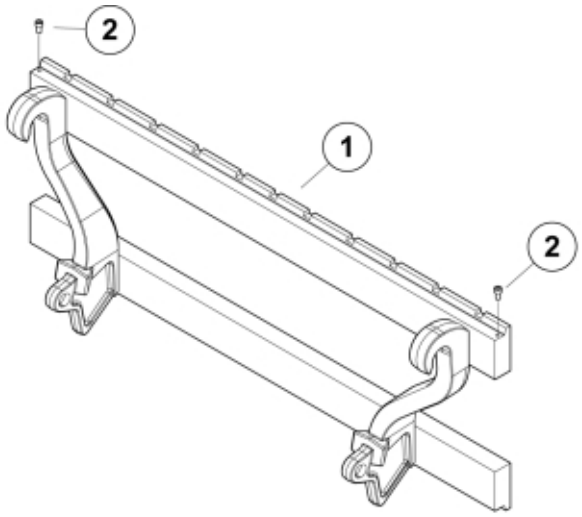

M 11256058

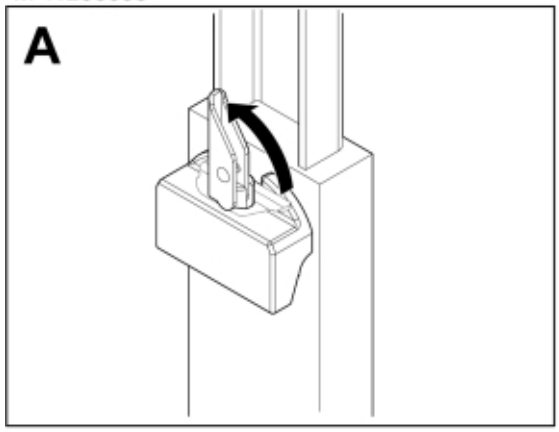

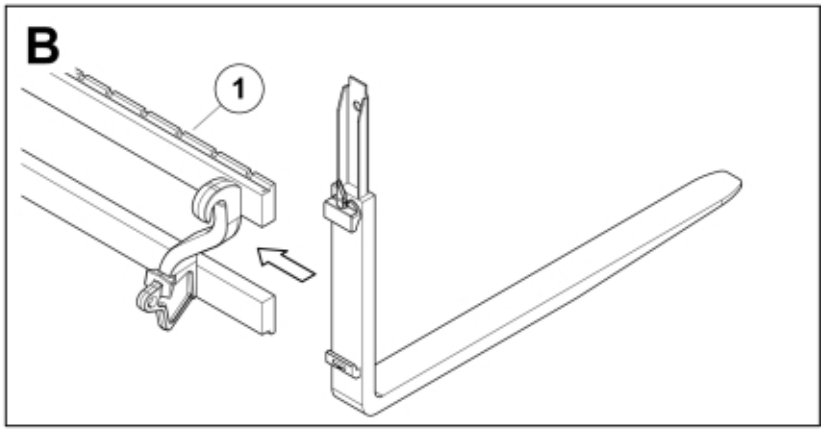

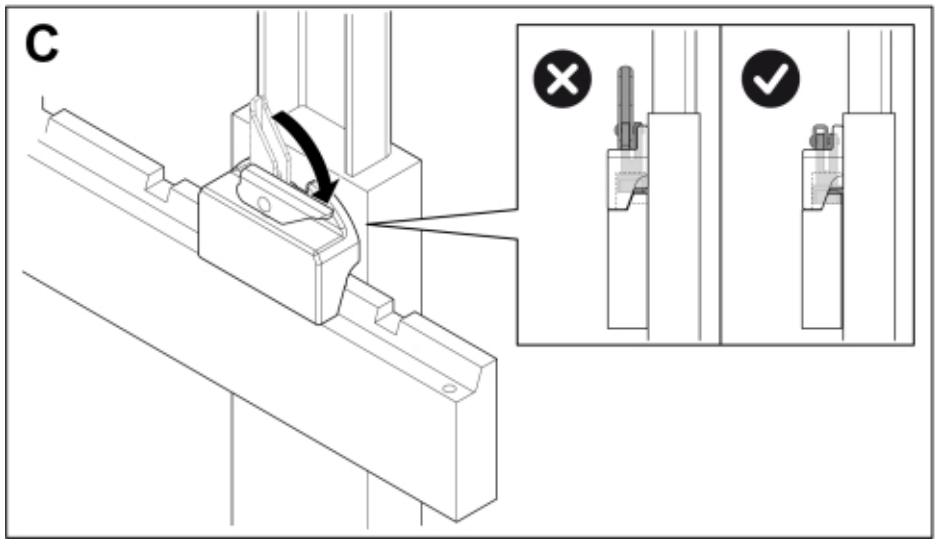

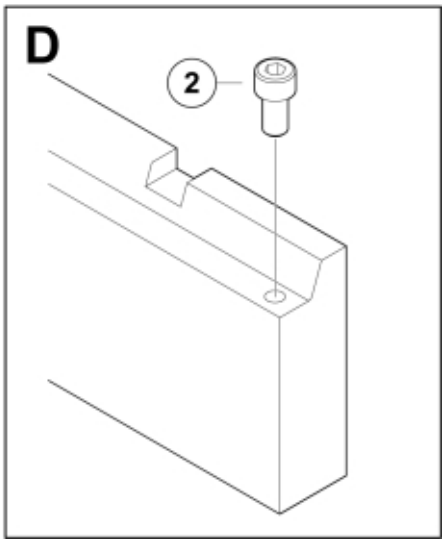

© 2025 Jost

Part assemblies	Pallet fork S - Euro
Specification	Year From: 1/1/2013 12:00:00 AM

PartNo	Pos	Qty	Name	Specifications
11256058	1	1	Pallet fork S - Euro	1/1/2013 12:00:00 AM
5004919	2	2	Screw	MC6S M8x16

© 2025 Jost