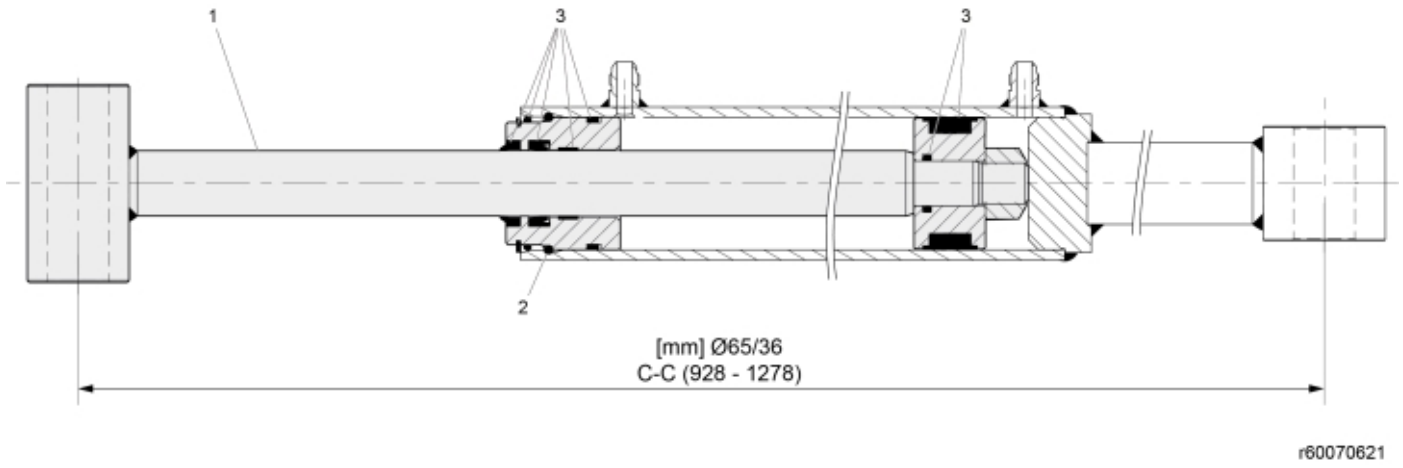

© 2025 Jost

Description	65/36
Part assemblies	Tilt Cylinder
Specification	Year From: 11/11/2021 12:00:00 AM
	Year To: 9/30/2022 12:00:00 AM

PartNo	Pos	Qty	Name	Specifications
60070557	1	1	Piston rod cpl.	
5016668	2	1	• Retaining ring	
60048046	3	1	Seal kit	

© 2025 Jost