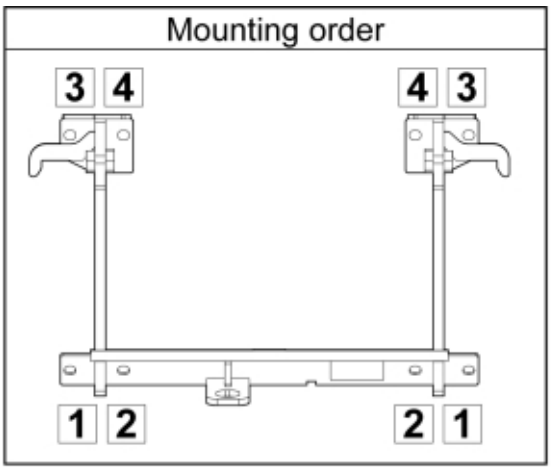

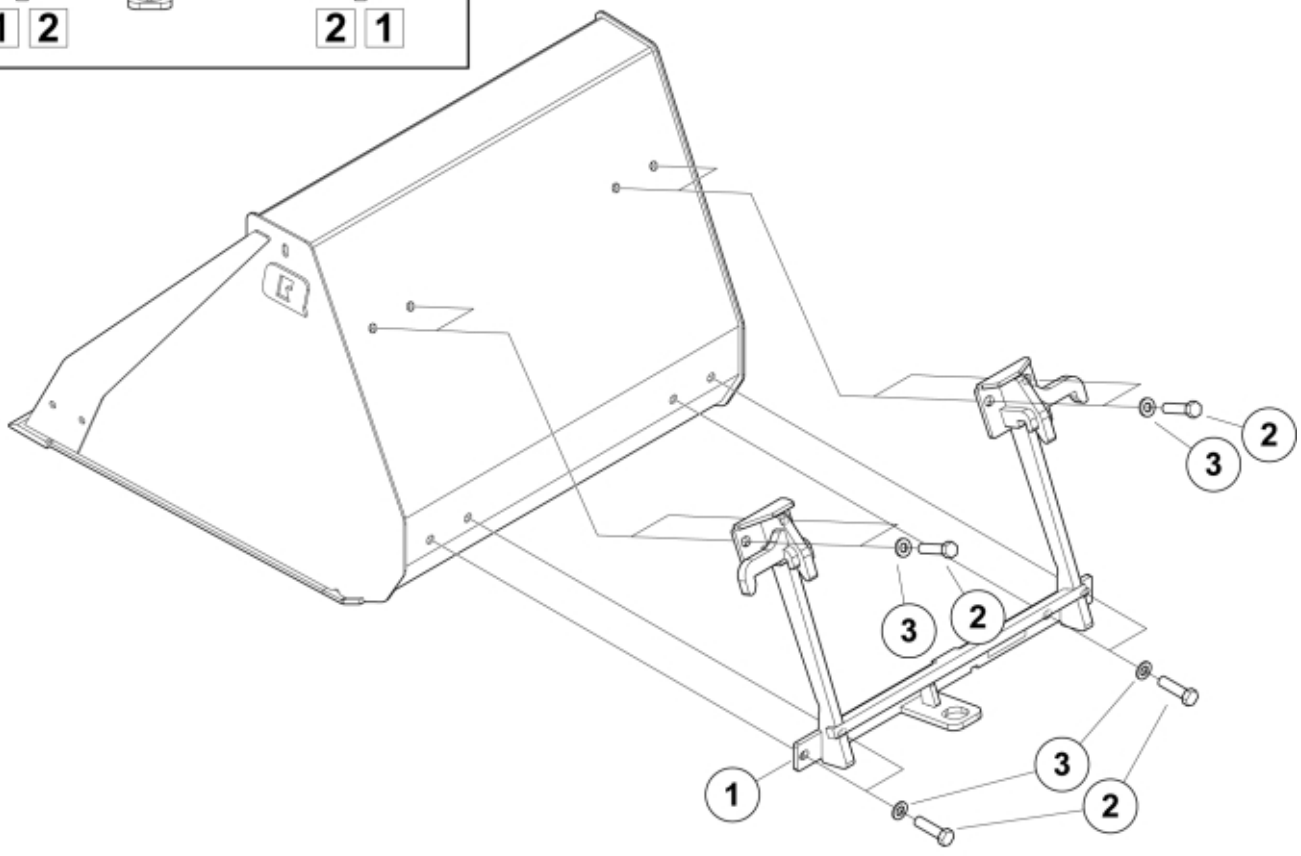

M 11256027

210 ± 20 Nm

© 2025 Jost

Part assemblies Attachment kit Weidemann MV

PartNo	Pos	Qty	Name	Specifications
11256027		1	Attachment kit Weidemann MV	
60063679	1	1 PCS	Attachment Weidemann MV	
60047988		1	Bolt kit	M16
5002153	2	8	• Screw	M6S M16 x 45
5051493	3	8	• Washer	M16

© 2025 Jost