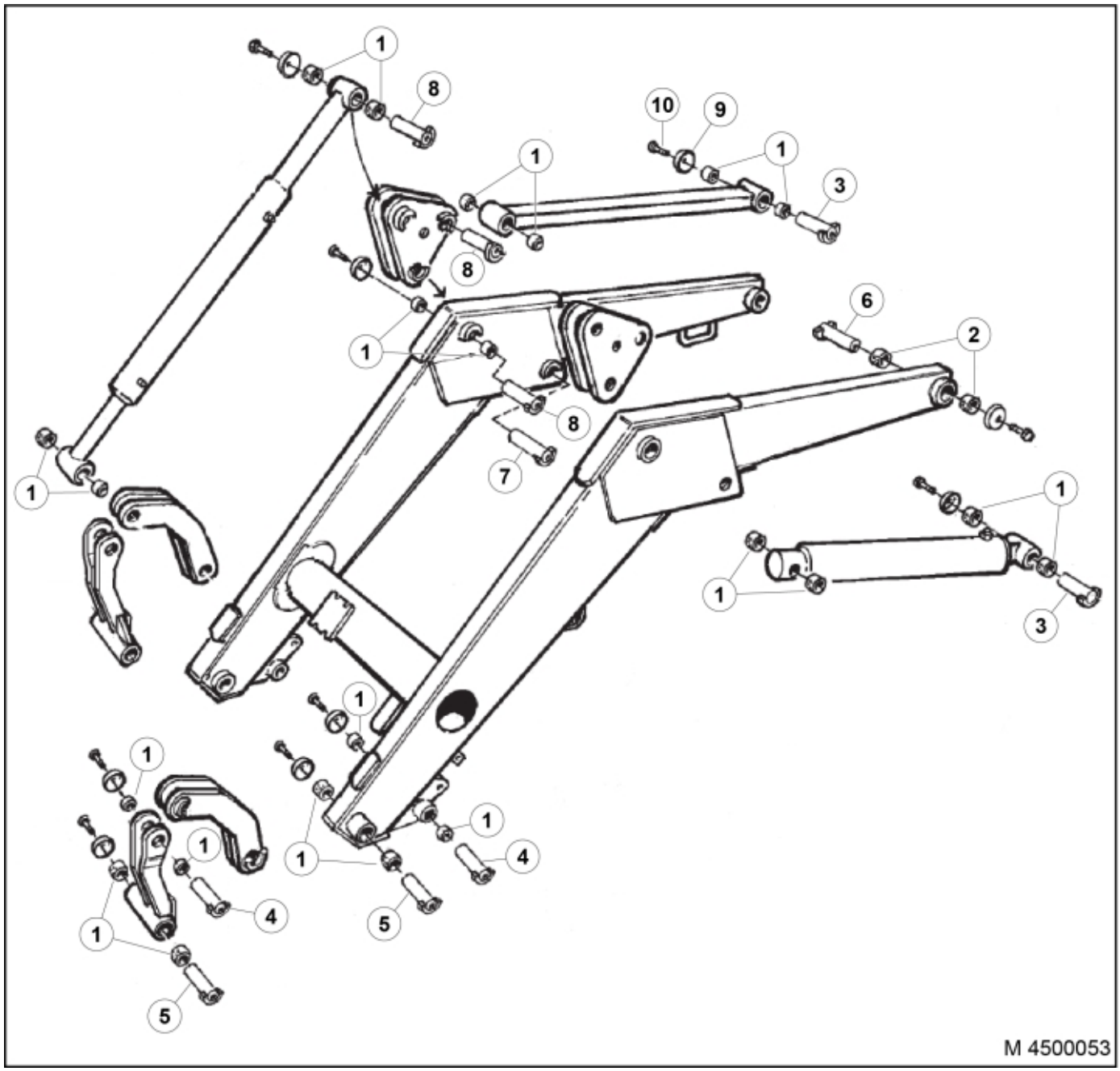

© 2025 Jost

Part assemblies Pin and bushing kit

PartNo	Pos	Qty	Name	Specifications
4500053		1 PCS	Pin and bushing kit	
5018514	1	44	Bushing	D35 L=20
5018513	2	4	Bushing	D40 L=20
1116941	3	4 PCS	Pivot Pin	Ø 35 x 119
1116935	4	4 PCS	Pivot Pin	Ø 35 x 131
1116934	5	4 PCS	Pivot Pin	Ø 35 x 167
1116927	6	2 PCS	Pivot Pin	Ø 40 x 121
1116462	7	2 PCS	Pivot Pin	Ø 35 x 101
1116937	8	6 PCS	Pivot Pin	Ø 35 x 144
5215131	9	22	Locking cover	
5004917	10	22	Screw	

© 2025 Jost