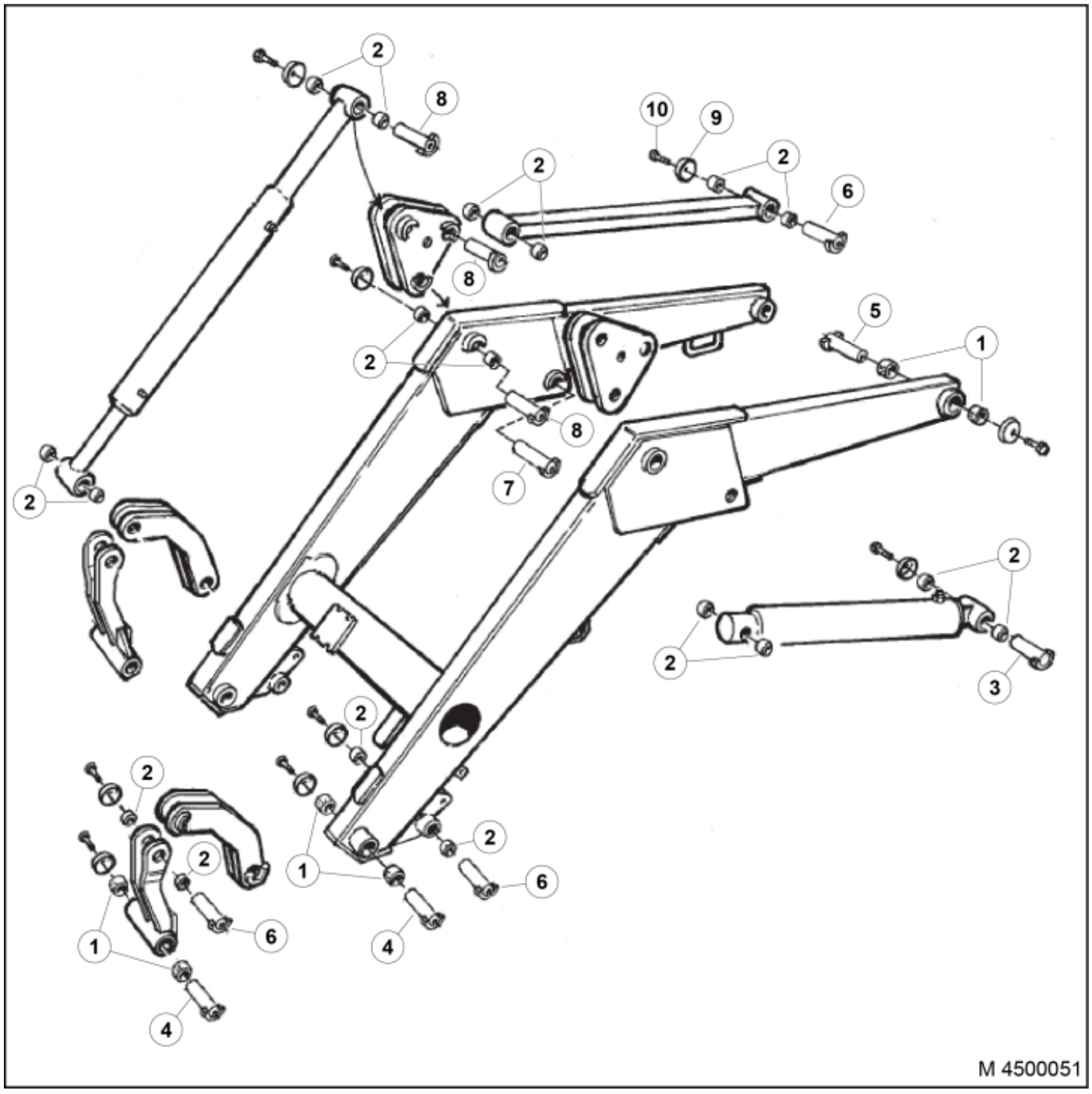

© 2025 Jost

Part assemblies Pin and bushing kit

PartNo	Pos	Qty	Name	Specifications
4500051		1 PCS	Pin and bushing kit	
5018514	1	12	Bushing	D35 L=20
5018515	2	36	Bushing	D30 L=20
1116932	3	2 PCS	Pivot Pin	Ø 30 x 119
1116934	4	4 PCS	Pivot Pin	Ø 35 x 167
1116941	5	2 PCS	Pivot Pin	Ø 35 x 119
1116946	6	6	Pivot Pin	Ø 30 x 121
1116930	7	2	Pivot Pin	Ø 30 x 96
1116928	8	6 PCS	Pivot Pin	Ø 30 x 131
5215131	9	22	Locking cover	
5050608	10	22	Screw	MC6S M10x20 Loc

© 2025 Jost