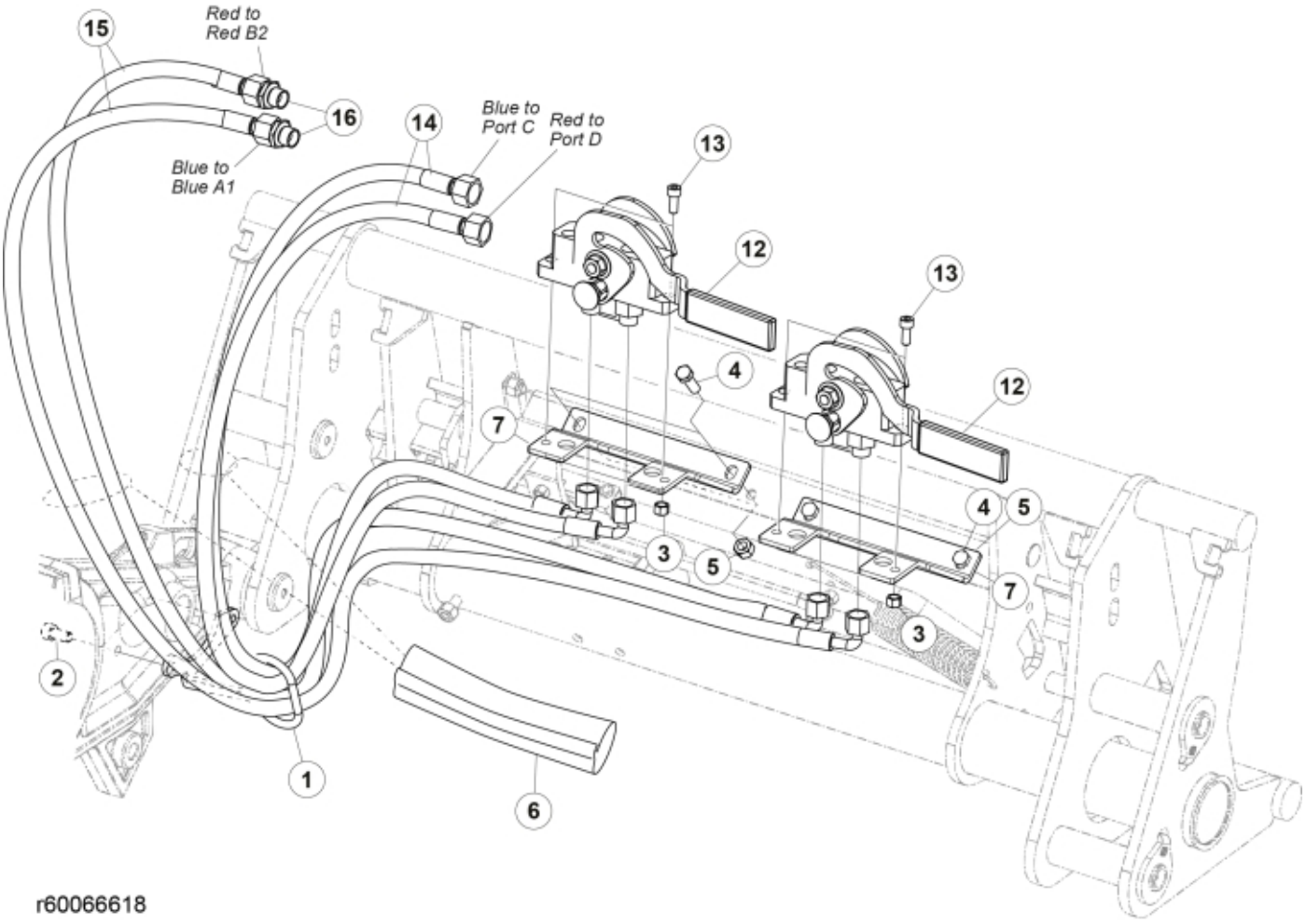

r60066618

© 2025 Jost

Description	DL
Part assemblies	3rd service & Live3, Dual SelectoFix Euro/SMS

PartNo	Pos	Qty	Name	Specifications
60032284	1	1	Hose guide	
5050608	2	2	Screw	MC6S M10x20 Loc
5011553	3	4	Nut	M6M M8 Loc-king
5002077	4	4	Screw	M6S 10x30
5011554	5	4	Nut	Loc-King M10
60019369	6	2	Hose cover	
60018733	7	2	Bracket	Euro/SMS
10550369	12	2	Selecto Fix, Lower part	
5004061	13	4	Screw	MC6S M8x20
60015750	14	2 PCS	Hose	3/8" L=1330 1/2GRLMA - 3/8G90LMA
60025356	15	2 PCS	Hose	3/8" L=1595 1/2GRLMA - 3/8G90LMA
1120011	16	2	Adaptor	R1/2"-R3/8"

© 2025 Jost