R 787010_788010

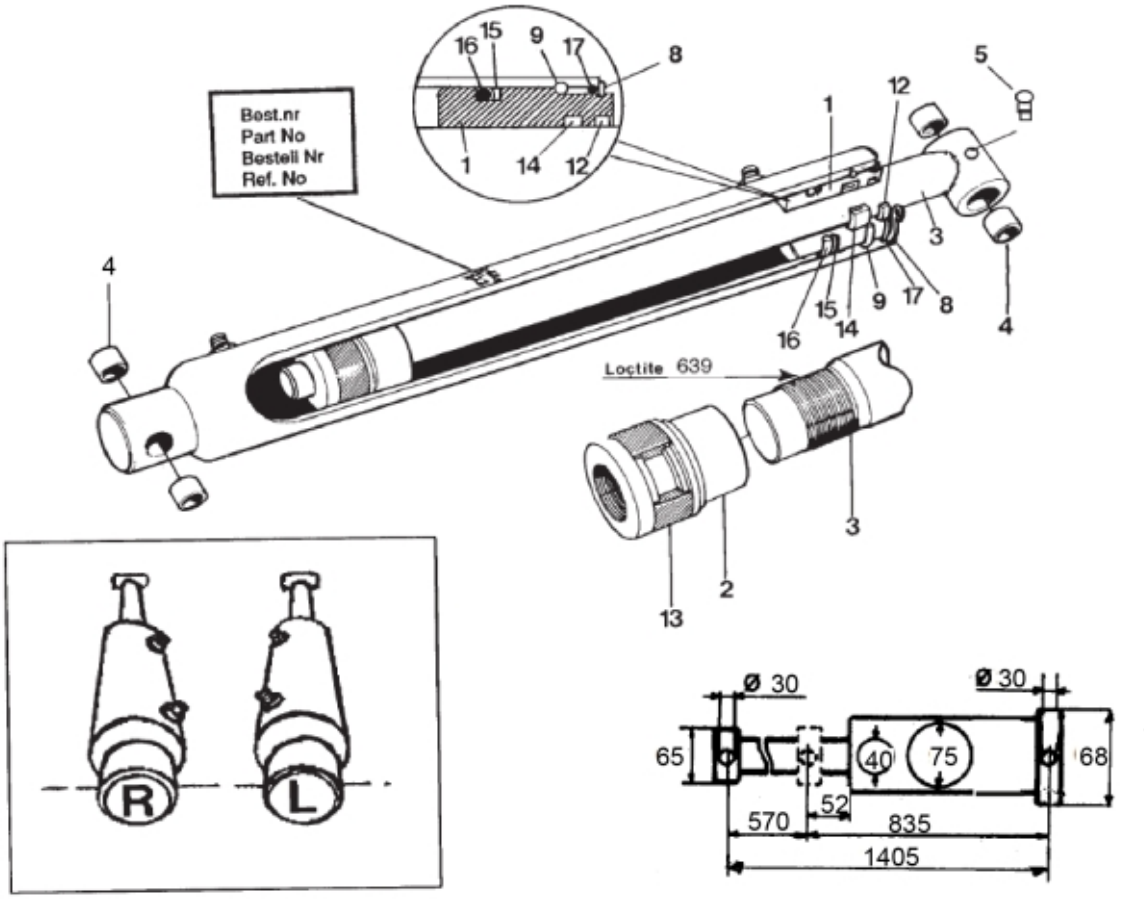

© 2025 Jost

Description	Ø 75/40 mm
Part assemblies	Cylinder RH
Specification	Year To: 12/31/2001 12:00:00 AM

PartNo	Pos	Qty	Name	Specifications
723011	1	1	Bearing	
709012	2	1	Piston	
778023	3	1	Piston rod	(778013)
5018515	4	4	Bushing	D30 L=20
5023005	5	1	Greaser	M 10 x 1
5016618	8	1	Retaining ring	
5016665	9	1	Retaining ring	
5036152		1	Seal kit	D75/40
5038101	12	1	• Wiper	40/50x7/10
5038283	13	1	• Piston seal	
5038254	14	1	• Seal	40/50x10
5038414	15	1	• Support Ring	
5037406	16	1	• O-ring	
5037239	17	1	• O-ring	68.26x3x53

© 2025 Jost