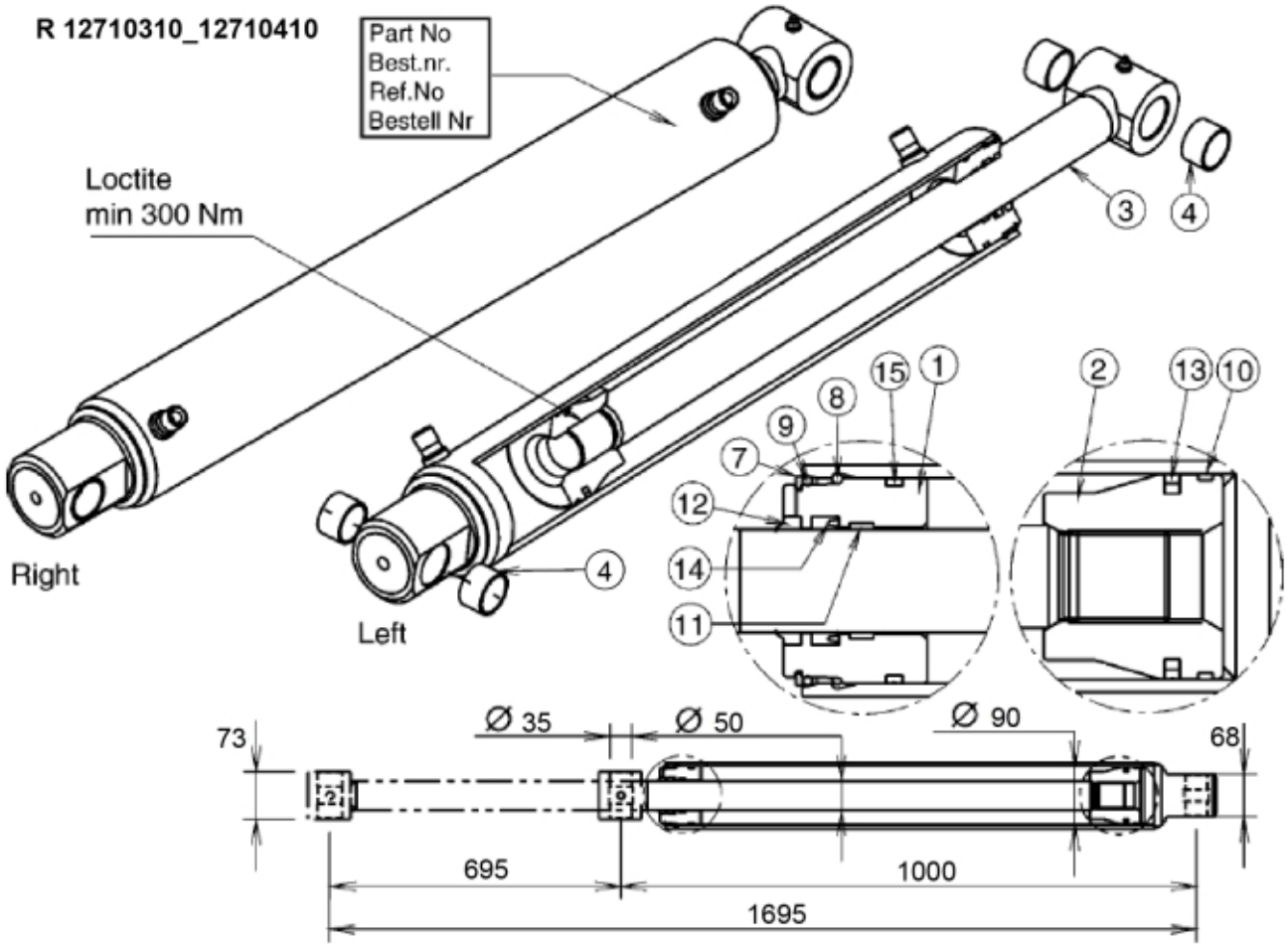
R 12710310_12710410
Part No
Best.nr.
Ref.No
Bestell Nr
Loctite
min 300 Nm
Right
Left
3
4
4
15
1
8
9
7
12
14
11
2
13
10
73
Ø 35
Ø 50
Ø 90
68
695
1000
1695

© 2025 Jost

Description	Ø 90/50 mm
Part assemblies	Cylinder

PartNo	Pos	Qty	Name	Specifications
12709111	1	1	Bearing	
12709012	2	1	Piston	
12710323	3	1	Piston rod	
5018514	4	4	Bushing	D35 L=20
5016619	7	1	Retaining ring	
5016666	8	1	Retaining ring	
5033709		1	Seal kit	
5037240	9	1	• O-ring	82,14 x 3,53
5040017	10	1	• Guide ring	90/85 x 5,5
5040011	11	1	• Guide ring	50/55 x 9,7
5038104	12	1	• Wiper	50/60 x 7/10
5040027	13	1	• Piston seal	90/74,5 x 6,3
5038256	14	1	• Seal	50/60 x 10
5039007	15	1	• Cover seal	90 x 83 x 6,5

© 2025 Jost