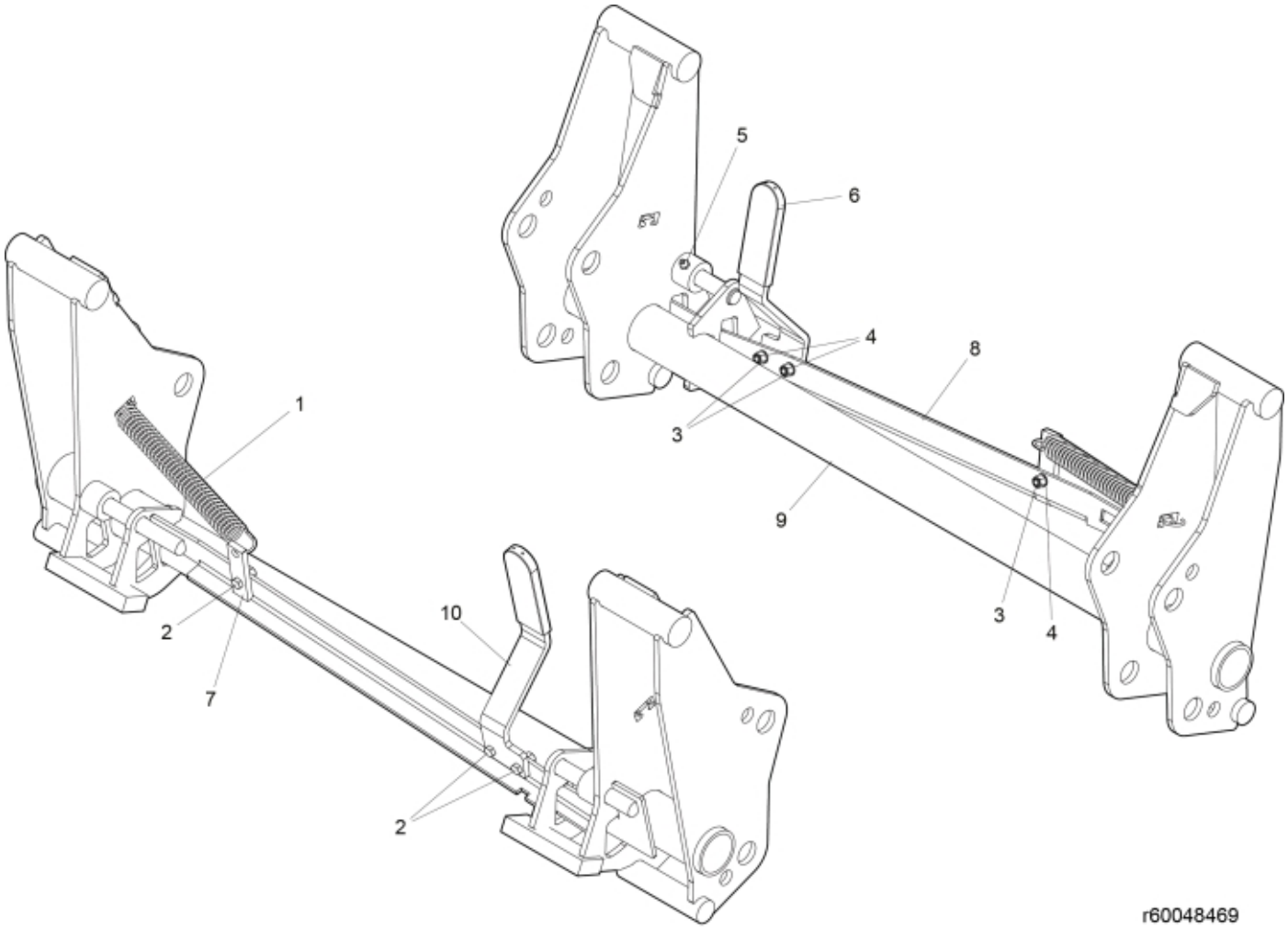

© 2025 Jost

Description	Tool carrier
Part assemblies	Euro

PartNo	Pos	Qty	Name	Specifications
60048469-1		1 PCS	Euro	
1101035	1	1	Spring	
5002052	2	3	Screw	M6S M8x25
5011553	3	3	Nut	M6M M8 Loc-king
5013101	4	3	Washer	BRB 8,4 x 16
5023005	5	1	Greaser	M 10 x 1
5022144	6	1	Cover	
5221512-1	7	1 PCS	Bracket	Glossy Black
5221530-1	8	1	Locking plate	Glossy Black
60048470-1	9	1 PCS	Tool carrier	Glossy Black
60044331	10	1	Handle	

© 2025 Jost