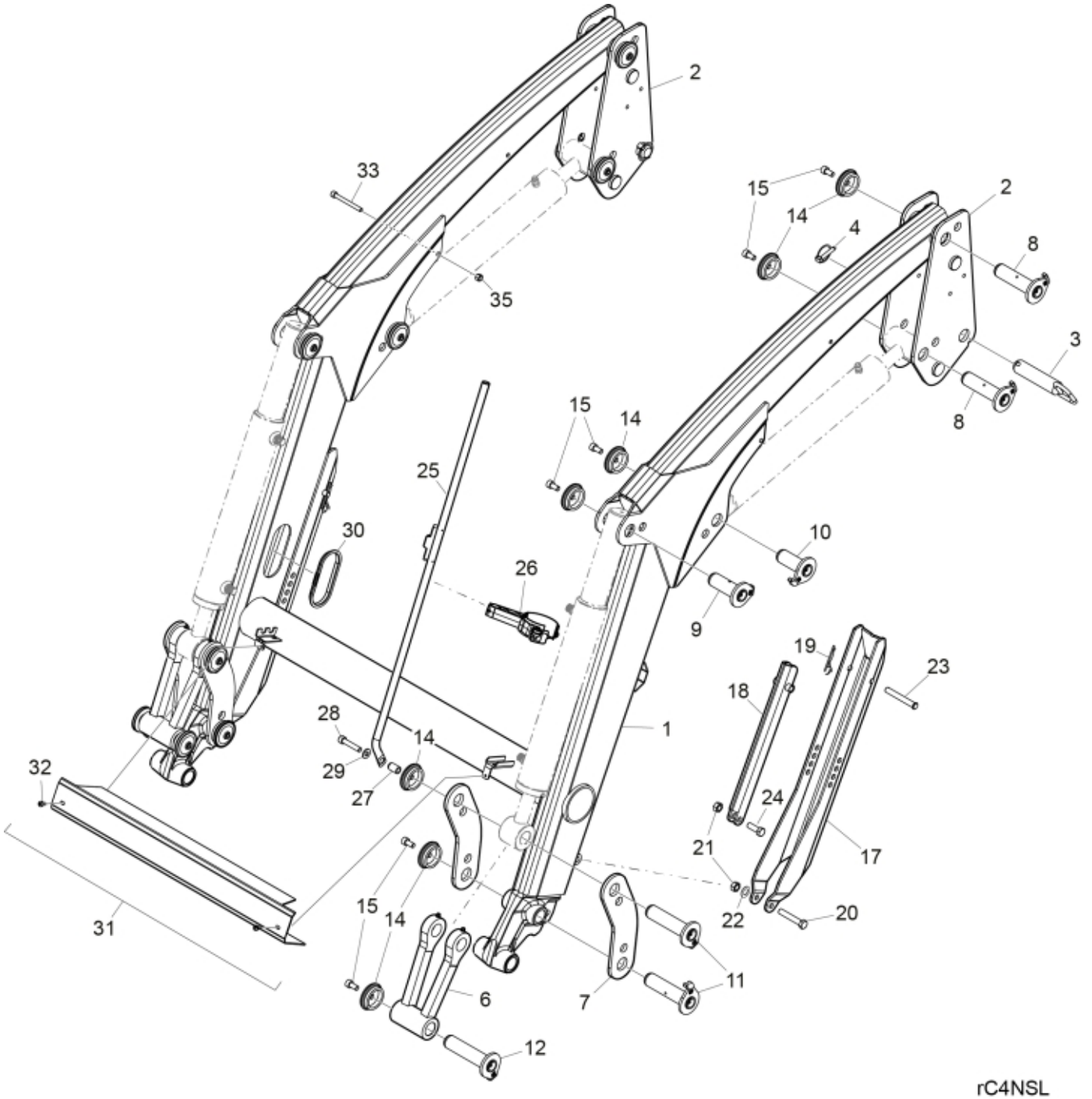
2
33
35
15
14
4
2
8
3
8
15
14
25
30
26
10
9
19
23
18
1
28
14
29
27
32
24
21
17
22
20
15
14
31
6
7
11
12
rC4NSL

© 2025 Jost

Part assemblies Loader beam

PartNo	Pos	Qty	Name	Specifications
60077640-17	1	1	Loader beam	
60043523-17	2	2	Bearing box	
5221316	3	2	Locking Pin	
5017002	4	2	Linch pin	
60044661-1	6	2	Link	Glossy Black
5221400-17	7	4	Link	Black Texture
9020105	8	4	Pivot Pin	D=30, L=113mm
60032041	9	2	Pivot Pin	D=30, L=81
60029313	10	2	Pivot Pin	D=30, L=75
9020100	11	2	Pivot Pin	D=30, L=122mm
60018046	12	2	Pivot Pin	D=30, L=127mm
5215131	14	14	Locking cover	
5050608	15	13	Screw	MC6S M10x20 Loc
60026832-17	17	2	Support leg	Black Texture
60027173-17	18	2	Stay	Black Texture
5221186	19	2	Pin clip	□ 12x120
5002988	20	2	Screw	M6S 12 x 70
5011911	21	4	Nut	M12
5013104	22	2	Washer	13.5 x 24 x 2
5221150	23	2	Locking Pin	
5002103	24	2	Screw	M12 x 35
5221787	25	1	Indicator rod	
5215208	26	1	Holder kit	
5215227	27	1	Spacer	
5050605	28	1	Screw	MC6S 10x50 Loc
5013110	29	1	Washer	BRB 10.5x22x2
60130480	30	2	Edge cover	
60046482	31	1	Cover kit	
5051982	32	2	• Screw	M6x8
5004054	33	1	Screw	MC6S M8x80
5011553	35	1	Nut	M6M M8 Loc-king

© 2025 Jost