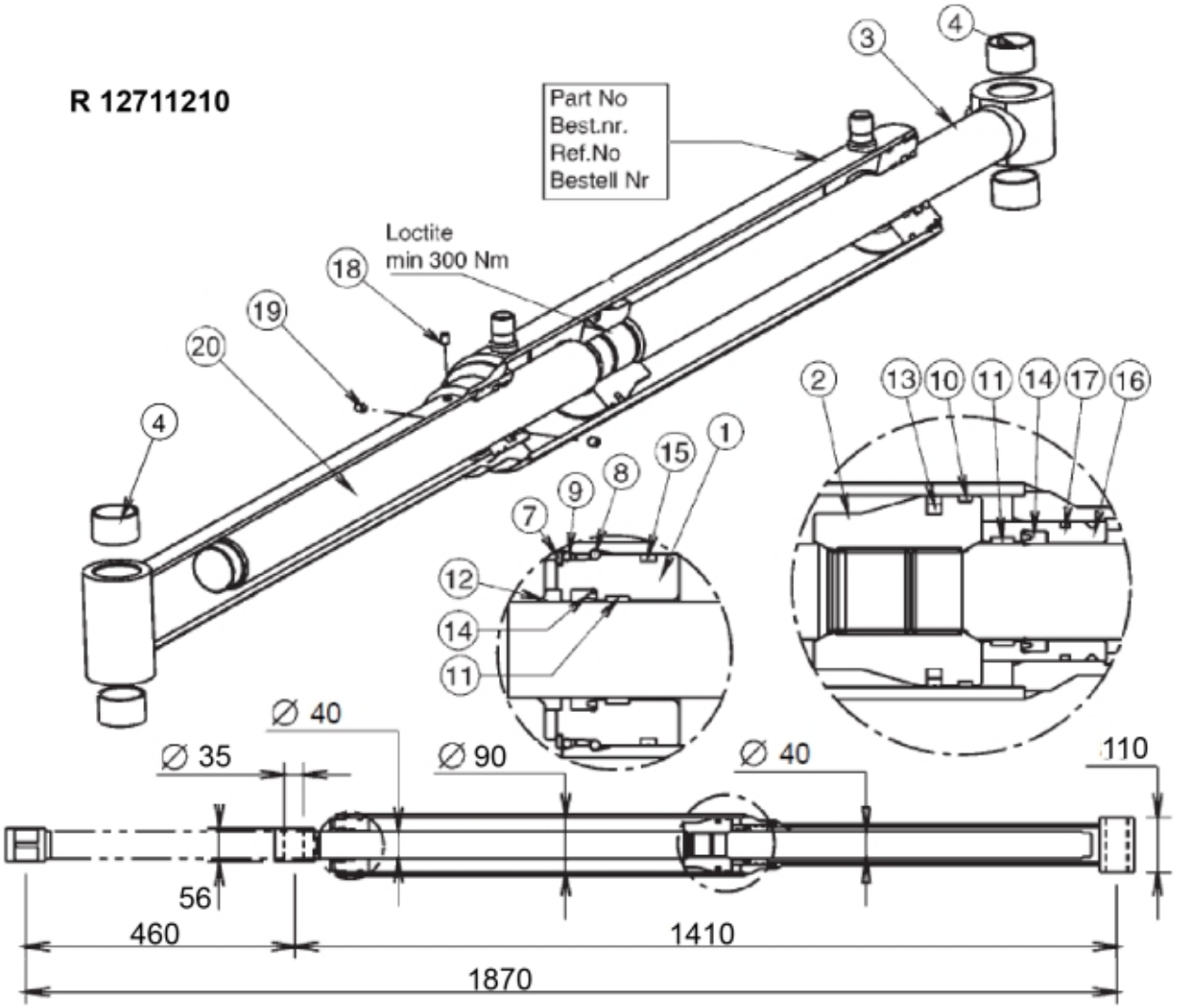
R 12711210
Part No
Best.nr.
Ref.No
Bestell Nr
Loctite
min 300 Nm
18
19
20
4
3
4
2
13
10
11
14
17
16
1
15
8
9
7
12
14
11
Ø 40
Ø 35
Ø 90
Ø 40
110
56
460
1410
1870

© 2025 Jost

Description	Ø 90/40/40 mm
Part assemblies	Cylinder

PartNo	Pos	Qty	Name	Specifications
12709011	1	1	Bearing	
12709012	2	1	Piston	
12708323	3	1	Piston rod	
5018514	4	4	Bushing	D35 L=20
5016619	7	1	Retaining ring	
5016666	8	1	Retaining ring	
12700017	16	1	Guide	
5005983	19	2	Stop screw	S6SS M6x16
12700915	20	1	Rear rod	
5033716		1	Seal kit	
5037240	9	1	• O-ring	82,14 x 3,53
5040017	10	1	• Guide ring	90/85 x 5,5
5040010	11	2	• Guide ring	40/45x9,7
5038101	12	1	• Wiper	40/50x7/10
5040027	13	1	• Piston seal	90/74,5 x 6,3
5038254	14	2	• Seal	40/50x10
5039007	15	1	• Cover seal	90 x 83 x 6,5
5039001	17	1	• Seal kit	58 x 53.4 x 4.1
5022095	18	1	• Plug	

© 2025 Jost