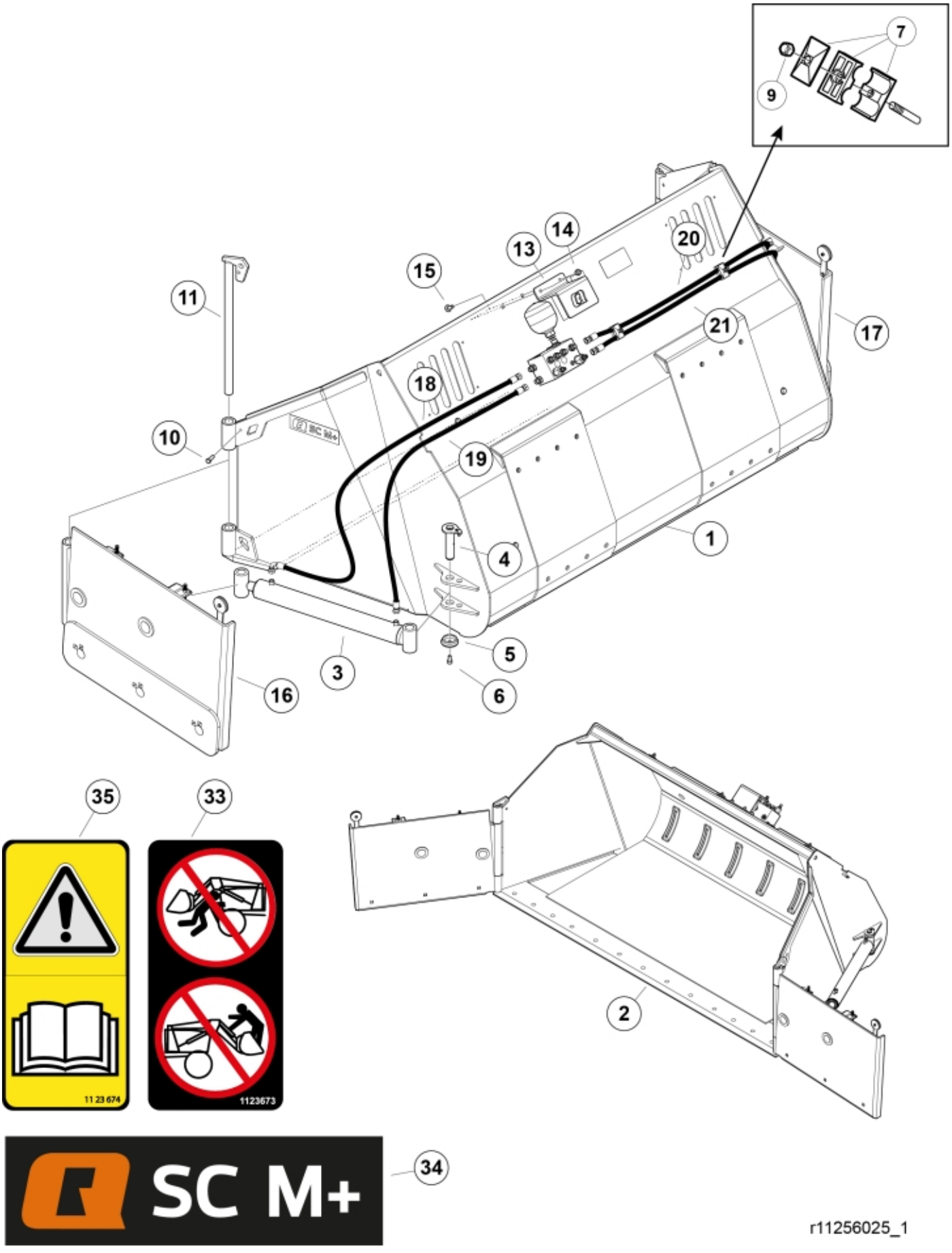
7
9
20
14
13
15
11
21
17
18
10
19
1
4
5
3
6
16
35
33
2
11 23 674
1123673
SC M+
34
r11256025_1

© 2025 Jost

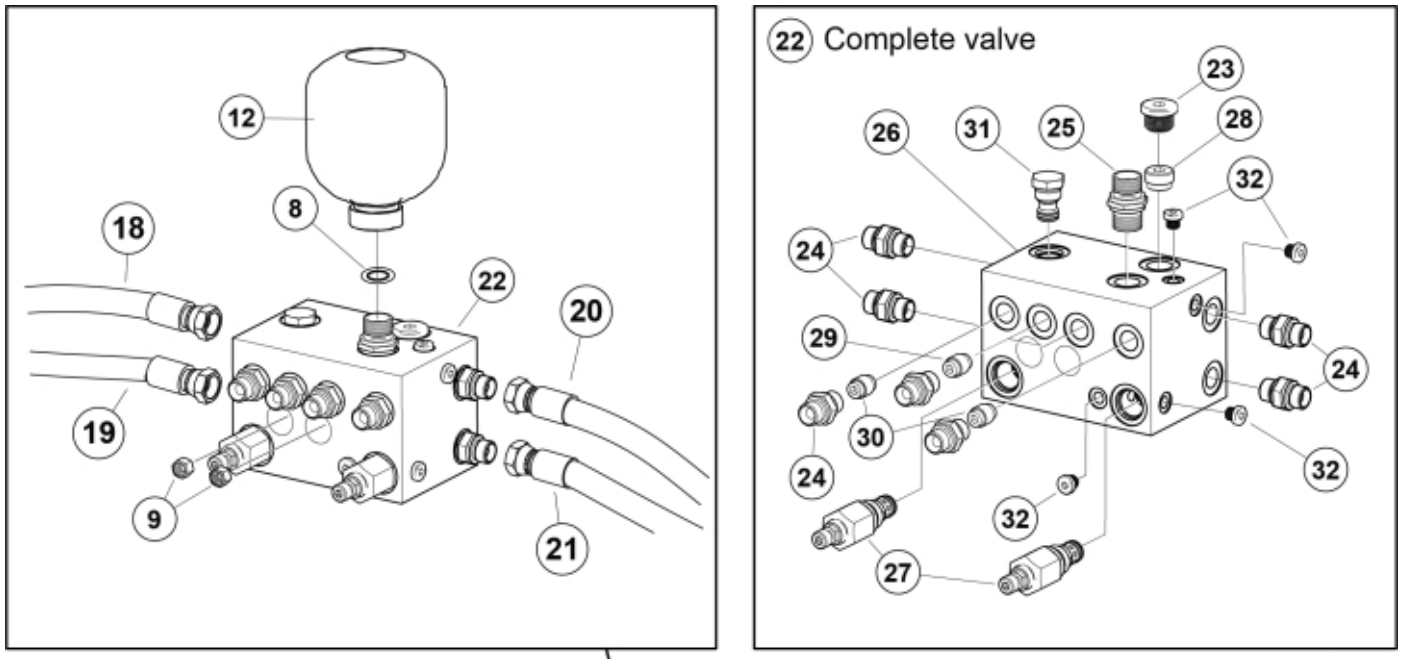

r11256025_2

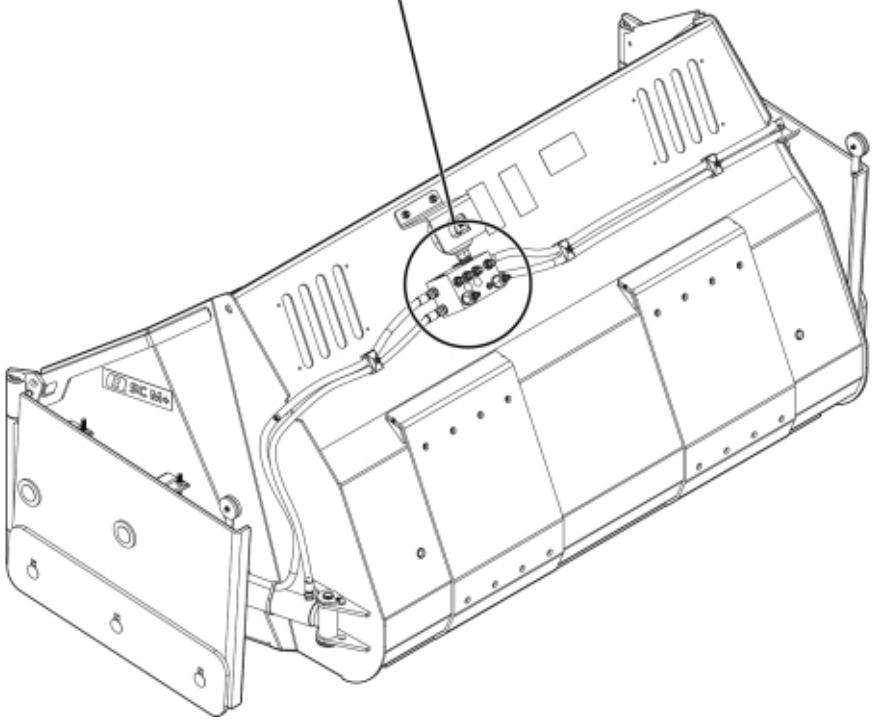

© 2025 Jost

Part assemblies	Bucket SC M+ 230
Specification	Year From: 12/1/2021 12:00:00 AM

PartNo	Pos	Qty	Name	Specifications
11256025		1	Bucket SC M+ 230	12/1/2021 12:00:00 AM
60061175	1	1 PCS	Bucket SC M+ 230	
60061982	2	1 PCS	Cutting edge	
12724610-1	3	2 PCS	Cylinder	
60018046	4	2	Pivot Pin	D=30, L=127mm
5215131	5	2	Locking cover	
5004917	6	2	Screw	
5016968	7	5	Hose clamp	
5013853	8	1	Dowty washer	Tredo 1/2", Part is included in kit 60007907 Hose cpl., 9032177 Hose cpl.
5011553	9	7	Nut	M6M M8 Loc-king
5002077	10	2	Screw	M6S 10x30
11251859	11	2 PCS	Rod	
5050692	12	1 PCS	Accumulator	
60019954-22	13	1 PCS	Cover plate	
5006002	14	2	Screw	MVBF 10x30
5011554	15	2	Nut	Loc-King M10
60039908	16	1	Flap LH cpl.	
60039747	17	1 PCS	Flap RH cpl.	
60062820		1 PCS	Hose kit	
60062832	18	1 PCS	• Hose	3/8" L=1750 3/8GRLM 3/8G90LMC
60062825	19	1 PCS	• Hose	3/8" L=1260 3/8GRLM 3/8GRLM
60062833	20	1 PCS	• Hose	3/8" L=2200 3/8GRLM 3/8G90LMC
60062827	21	1 PCS	• Hose	3/8" L=1700 3/8GRLM 3/8GRLM
10550465	22	1	Valve cpl.	
5028245	23	1	• Plug	G1/2"
5028255	24	8 PCS	• Adaptor	G3/8" - G3/8"
5028256	25	1 PCS	• Adaptor	G1/2" - G1/2"
5034287	26	1 PCS	• Block	
5034288	27	2 PCS	• Pressure relief valve	
5034289	28	1 PCS	• Check valve	
5034290	29	2 PCS	• Restrictor valve	
5034291	30	2 PCS	• Restrictor valve	
5034293	31	1 PCS	• Plug	
5028242	32	4	• Plug	G1/8"
1123673	33	1	Warning decal	
60071220	34	2	Decal	"SC M+"
1123674	35	1	Warning decal	"Read manual"

© 2025 Jost