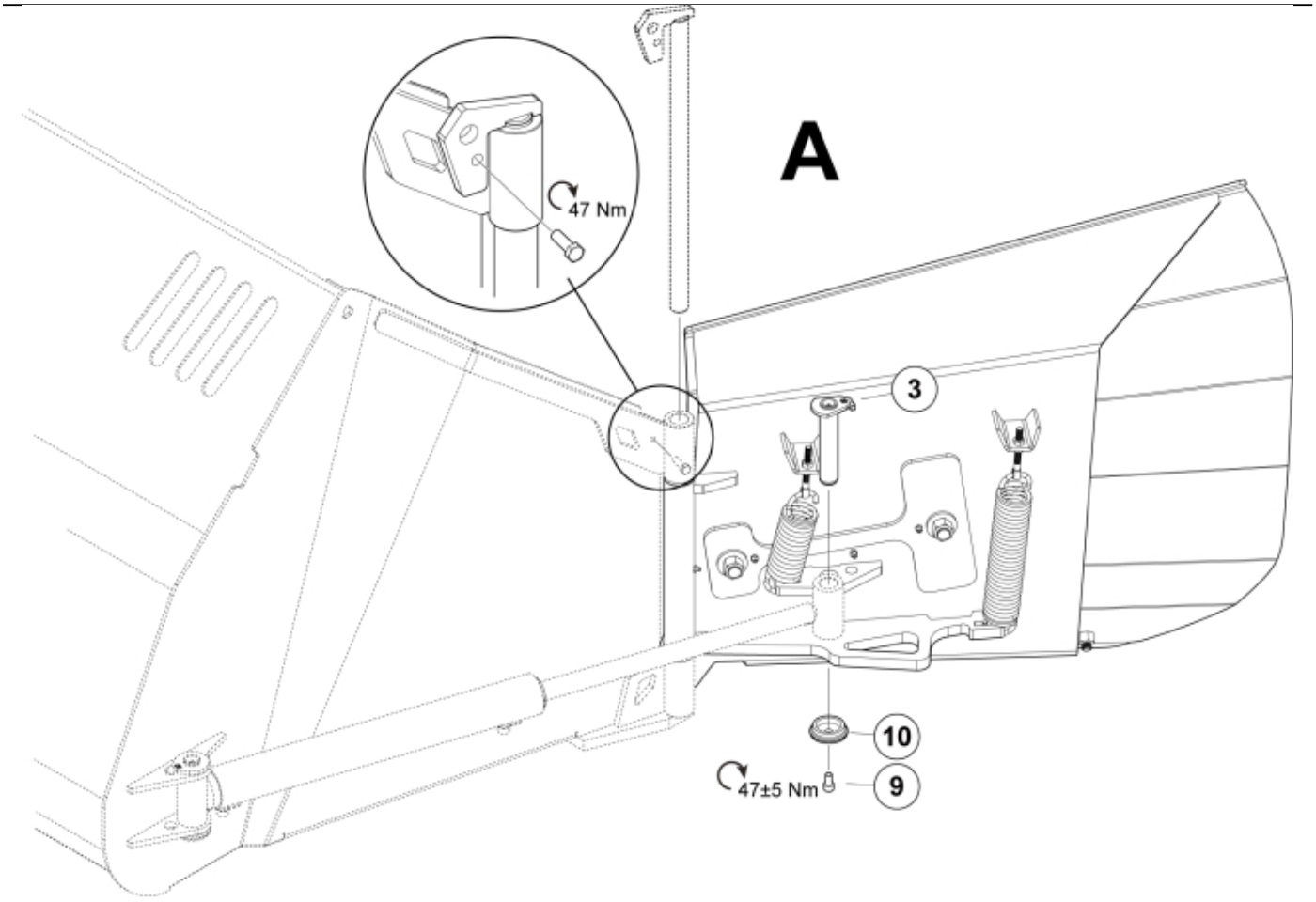

M 11256078_11256081_1

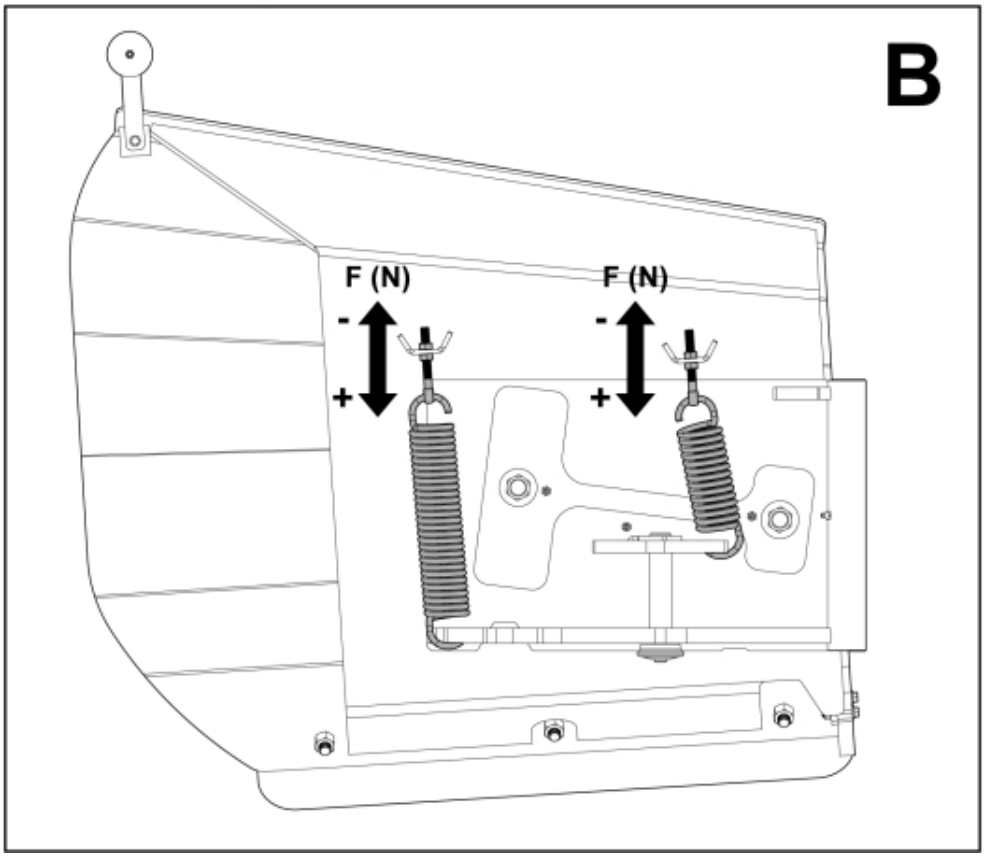

© 2025 Jost

Spare parts

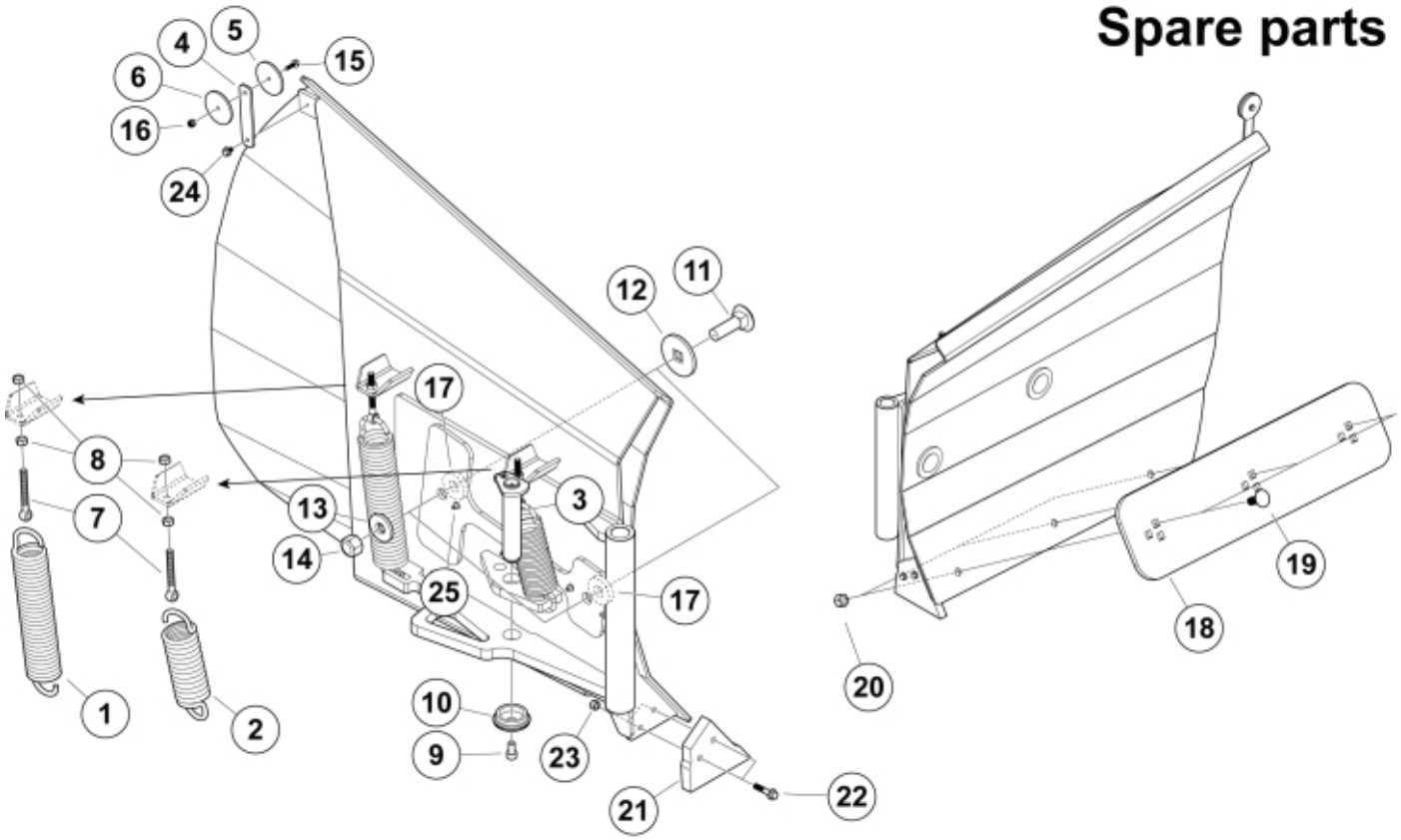

M 11256078_11256081_2

© 2025 Jost

Description	Bucket SC M+ 230
Part assemblies	Plow RH
Specification	Year To: 12/11/2025 12:00:00 AM

PartNo	Pos	Qty	Name	Specifications
11256078		1	Plow RH	12/11/2025 12:00:00 AM
60062870	1	1 PCS	Spring	
11262577	2	1 PCS	Spring	L=180
60070823	3	1 PCS	Pivot Pin	
60070962	4	1 PCS	Bracket	
60070966	5	1 PCS	Reflector	
60071051	6	1 PCS	Reflector	
60071541	7	2 PCS	Screw	
5011054	8	4	Nut	M6M M10
5004917	9	1	Screw	
5215131	10	1	Locking cover	
5051598	11	2 PCS	Screw	MVBF M20x70
60024963	12	2 PCS	Washer	
5050574	13	2 PCS	Washer	21x50x6
5011559	14	2	Nut	Loc-king M20x2,5 (10), Part is included in kit 11255098 Attachment kit Dieci Large, 11255234 Attachment kit Dieci Medium, 11255238 Attachment kit Dieci Small, 11255241 Attachment kit JLG Deutz, 11255233 Attachment kit Schäffer type SWH, 11255326 Attachment kit Weidemann, 11255184 Attachment kit CAT TH, 11255096 Attachment kit Merlo
5006030	15	1 PCS	Screw	
20708137	16	1	Nut	M6 FZB, 708137
60024961	17	2 PCS	Spacer	
60039826-22	18	1	Bolt-on cutting edge	
5006038	19	3 PCS	Screw	MVBF M16x45
5011557	20	3	Nut	Loc-King M16
60040066	21	1 PCS	Rubber wedge	
5050118	22	2	Screw	M6SF M8X40 (8.8)
5011553	23	2	Nut	M6M M8 Loc-king
5052145	24	1 PCS	Screw	M6SF M6X10
5023005	25	4	Greaser	M 10 x 1

© 2025 Jost