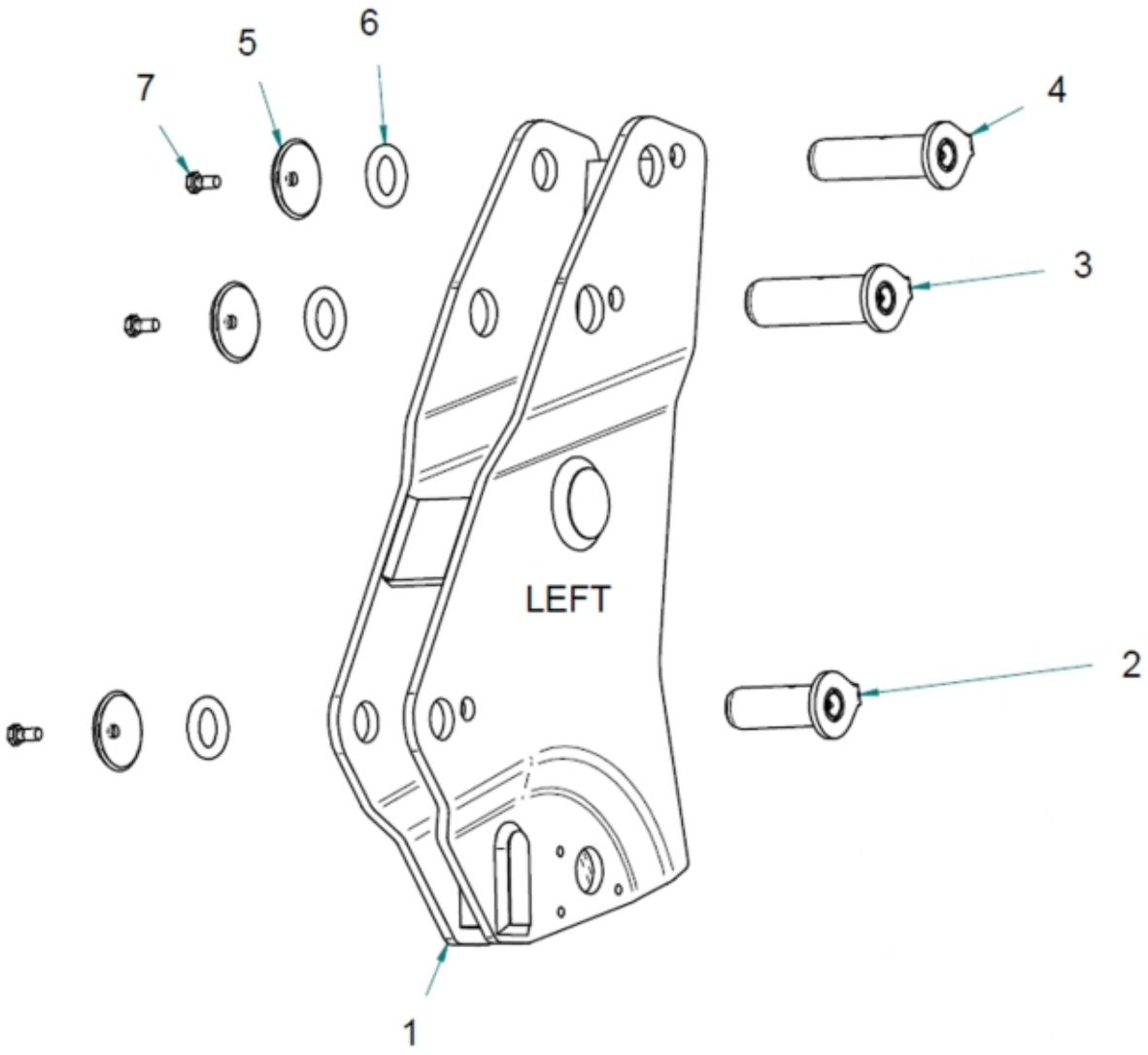

© 2025 Jost

Description	DM
Part assemblies	Bearing box

PartNo	Pos	Qty	Name	Specifications
5212516-1	1	1 PCS	Bearing box LH	
9020037	2	1	Pin	D=30, L=96mm
9020038	3	1	Pivot Pin	D=35, L=96mm
9020037	4	1	Pin	D=30, L=96mm
142893	5	3	Locking cover	
5022089	6	3	Rubber ring	
5005993	7	3 PCS	Screw	M6SF 10x20
5212526-1	1	1 PCS	Bearing box RH	
9020037	2	1	Pin	D=30, L=96mm
9020038	3	1	Pivot Pin	D=35, L=96mm
9020037	4	1	Pin	D=30, L=96mm
142893	5	3	Locking cover	
5022089	6	3	Rubber ring	
5005993	7	3 PCS	Screw	M6SF 10x20

© 2025 Jost