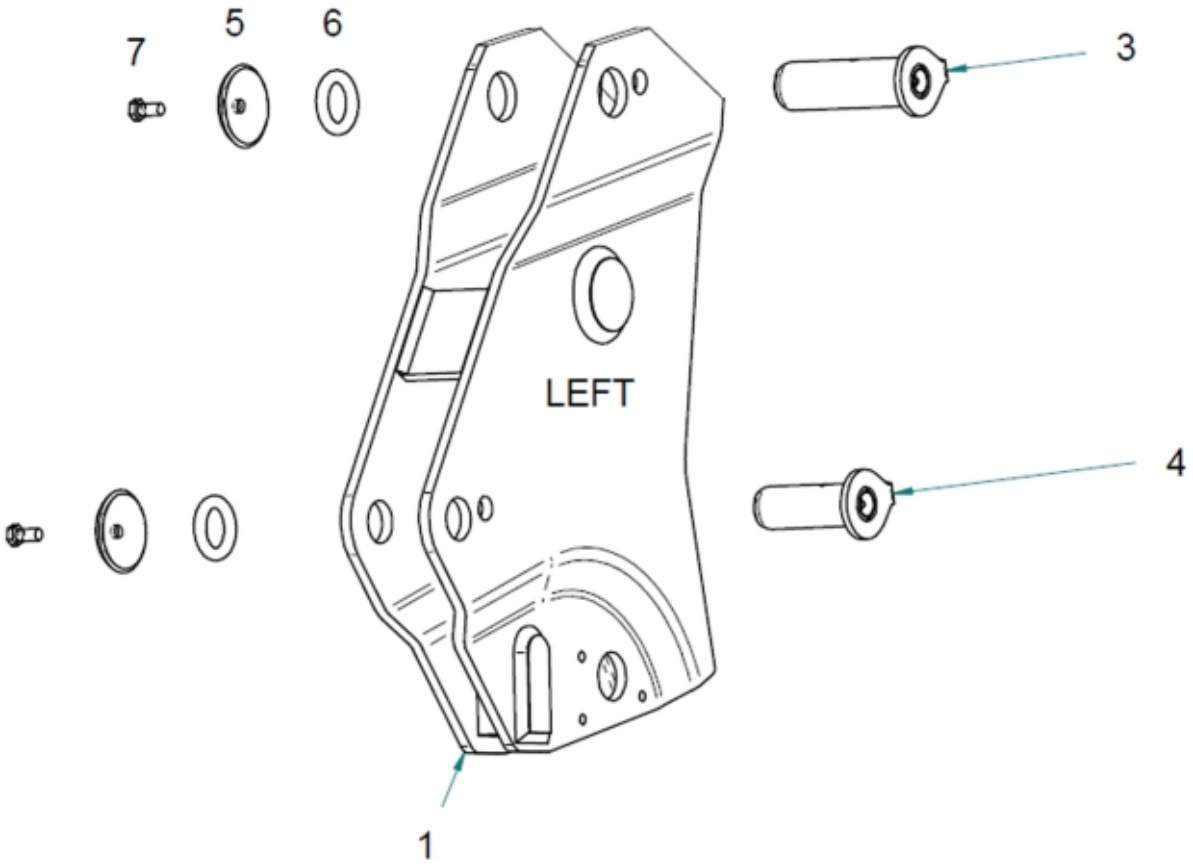



© 2025 Jost

| | |
|---|---|
| **Description** | DM |
| **Part assemblies** | Bearing box |

| PartNo | Pos | Qty | Name | Specifications |
|---|---|---|---|---|
| 5212567-1 | 1 | 1 PCS | Bearing box LH | |
| 9020058 | 3 | 1 PCS | Pivot Pin | Ø 35 x 118 |
| 9020038 | 4 | 1 | Pivot Pin | D=35, L=96mm |
| 142893 | 5 | 2 | Locking cover | |
| 5022089 | 6 | 2 | Rubber ring | |
| 5005993 | 7 | 2 PCS | Screw | M6SF 10x20 |
| 5212569-1 | 1 | 1 PCS | Bearing box RH | |
| 9020058 | 3 | 1 PCS | Pivot Pin | Ø 35 x 118 |
| 9020038 | 4 | 1 | Pivot Pin | D=35, L=96mm |
| 142893 | 5 | 2 | Locking cover | |
| 5022089 | 6 | 2 | Rubber ring | |
| 5005993 | 7 | 2 PCS | Screw | M6SF 10x20 |


© 2025 Jost