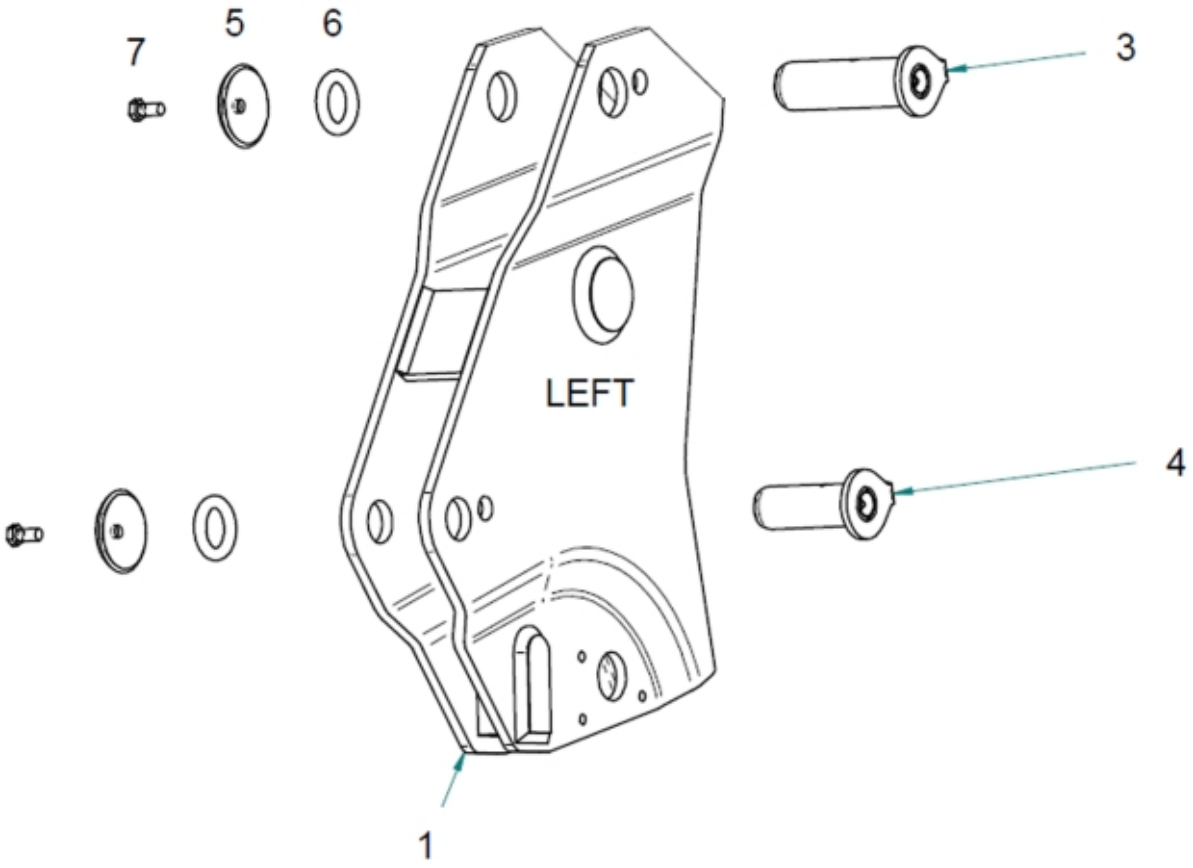

© 2025 Jost

Description	DM
Part assemblies	Bearing box

PartNo	Pos	Qty	Name	Specifications
5212567-1	1	1 PCS	Bearing box LH	
9020058	3	1 PCS	Pivot Pin	Ø 35 x 118
9020038	4	1	Pivot Pin	D=35, L=96mm
142893	5	2	Locking cover	
5022089	6	2	Rubber ring	
5005993	7	2 PCS	Screw	M6SF 10x20
5212569-1	1	1 PCS	Bearing box RH	
9020058	3	1 PCS	Pivot Pin	Ø 35 x 118
9020038	4	1	Pivot Pin	D=35, L=96mm
142893	5	2	Locking cover	
5022089	6	2	Rubber ring	
5005993	7	2 PCS	Screw	M6SF 10x20

© 2025 Jost