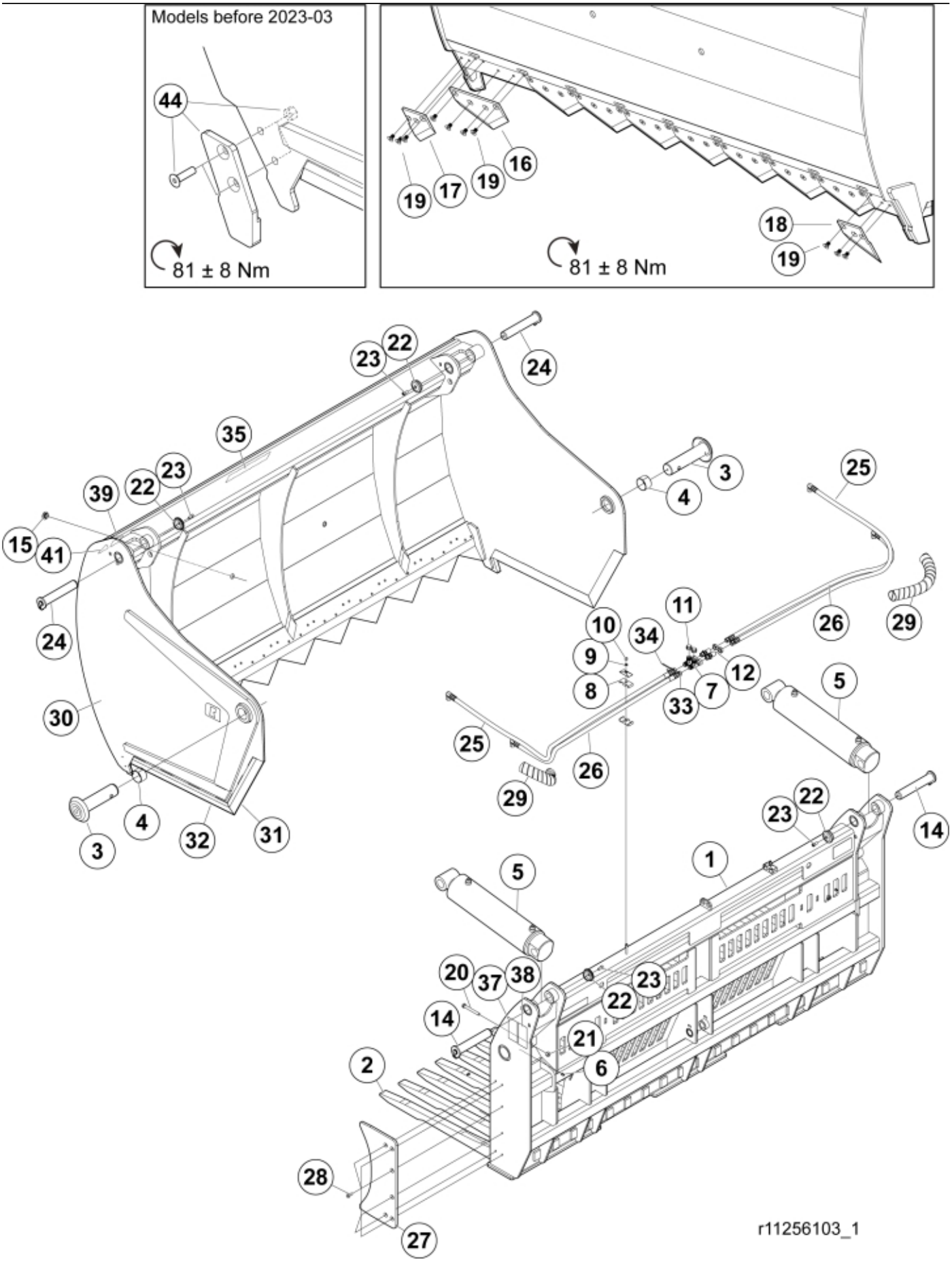
Models before 2023-03
44
81 ± 8 Nm
19
17
19
16
81 ± 8 Nm
18
19
23
22
24
35
39
22
23
15
41
24
30
4
3
32
31
3
4
25
26
29
11
10
34
9
8
12
7
33
5
25
26
29
23
22
14
1
5
20
37
38
23
22
14
21
6
2
28
27
r11256103_1

© 2025 Jost





r11256100-101-103-104_2

© 2025 Jost

Part assemblies	Silocut XL+ 250 Profiled tines
Specification	Year From: 3/1/2022 12:00:00 AM

PartNo	Pos	Qty	Name	Specifications
11256103		1	Silocut XL+ 250 Profiled tines	3/1/2022 12:00:00 AM
60034012-17	1	1	Frame	
60034749	2	20	• Tine	
60027947	3	2	Pin	
5051187	4	2	Bushing	
60119716-1	5	2	Cylinder	4/29/2026 12:00:00 AM
5023005	6	2	Greaser	M 10 x 1
5028031	7	2	T-Adapter	
5051191	8	2	Hose clamp	
5013101	9	2	Washer	BRB 8,4 x 16
5011553	10	2	Nut	M6M M8 Loc-king
5028311	11	2	Plug	
11120580	12	2	Adapter cpl.	
60006393	14	2	Pin	
5022119	15	2	Plug	
11262629-22	16	9	Cutting edge	250mm
11262628-22	17	1	Cutting edge RH	125mm
11262627-22	18	1	Cutting edge LH	125mm
5050610	19	42	Screw	MF6S M12X20 (12.9)
5002114	20	2	Screw	M6S 12x100
5011555	21	2	Nut	M12 Loc
5215131	22	4	Locking cover	
5050608	23	4	Screw	MC6S M10x20 Loc
60030256	24	2	Pin cpl.	
60030584		1	Hose kit	
60030576	25	2	• Hose	1/2" L=1800 1/2" G90LMC 1/2" GRLM
60030582	26	2	• Hose	1/2" L=1450 1/2" G90LMC 1/2" GRLM
60029953	27	2	Plate	
5005990	28	12	Screw	MF6S M10 x 30 (10.9)
5034439	29	2	Protection sleeve	
60070878-17	30	1	Jaw	
60027313	31	2	• Cutting edge	
60027873	32	2	• Cutting edge	
5022177	33	1	Cable tie	Red
5022179	34	1	Cable tie	Blue
60062210	35	1	Decal	"Silocut XL+"
60056616	36	2	Decal	"Q" medium 110mm
1123673	37	1	Warning decal	
1123674	38	1	Warning decal	"Read manual"
11137324	39	1	Warning decal	"Keep cutting edges sharp"
60034425	40	1	Warning decal	
11136516	41	1	Warning decal	
11136459	42	1	Warning decal	Only for North Am. Warning triangle
11136447	43	2	Warning decal	Only for North Am. DANGER
60092333	44	1	Service kit	
		1	• Tooth	
		1	• Tooth	
		4	• Screw	

© 2025 Jost

	4	• Nut	M12 Loc

© 2025 Jost