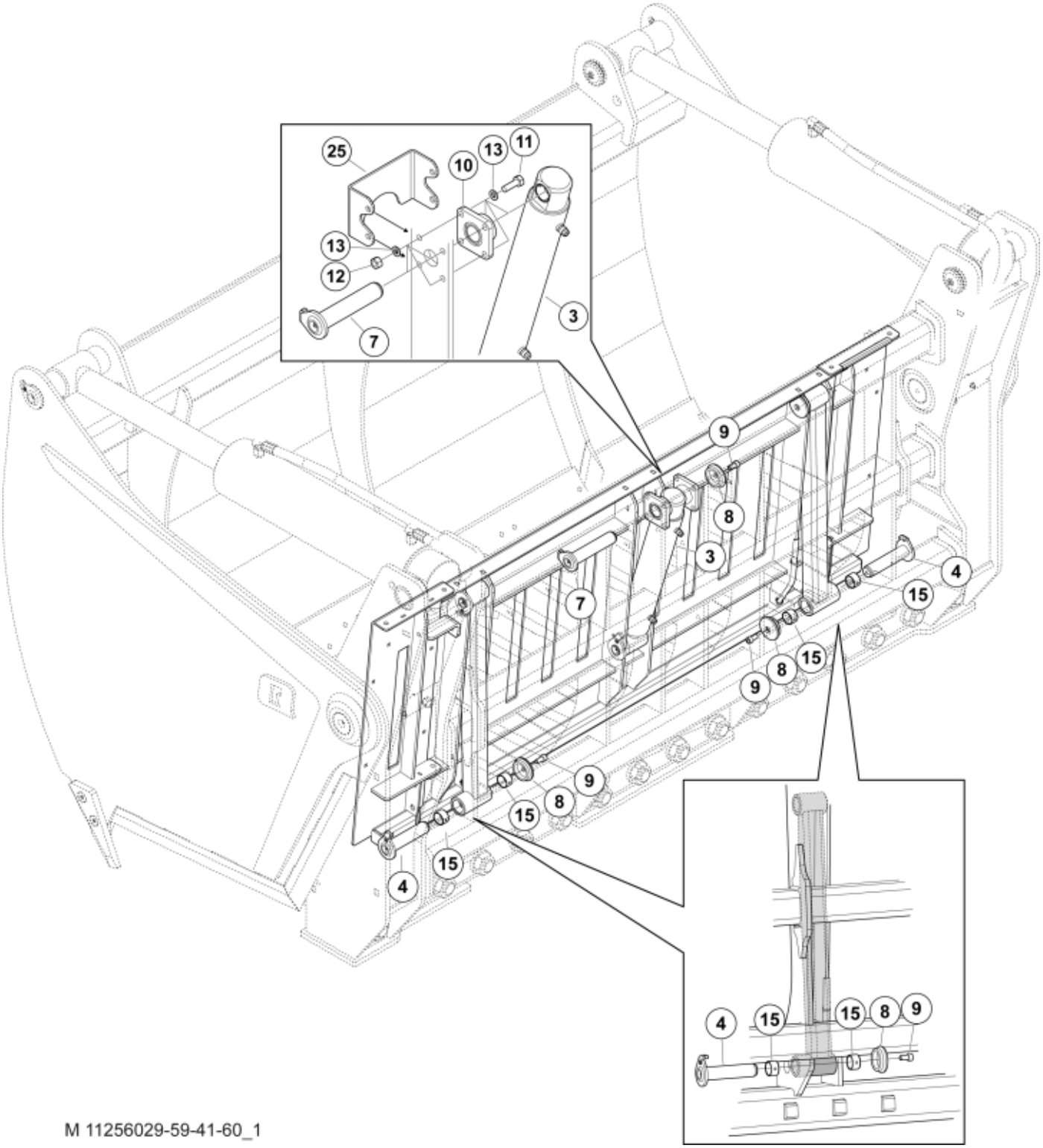

M 11256029-59-41-60_1

© 2025 Jost

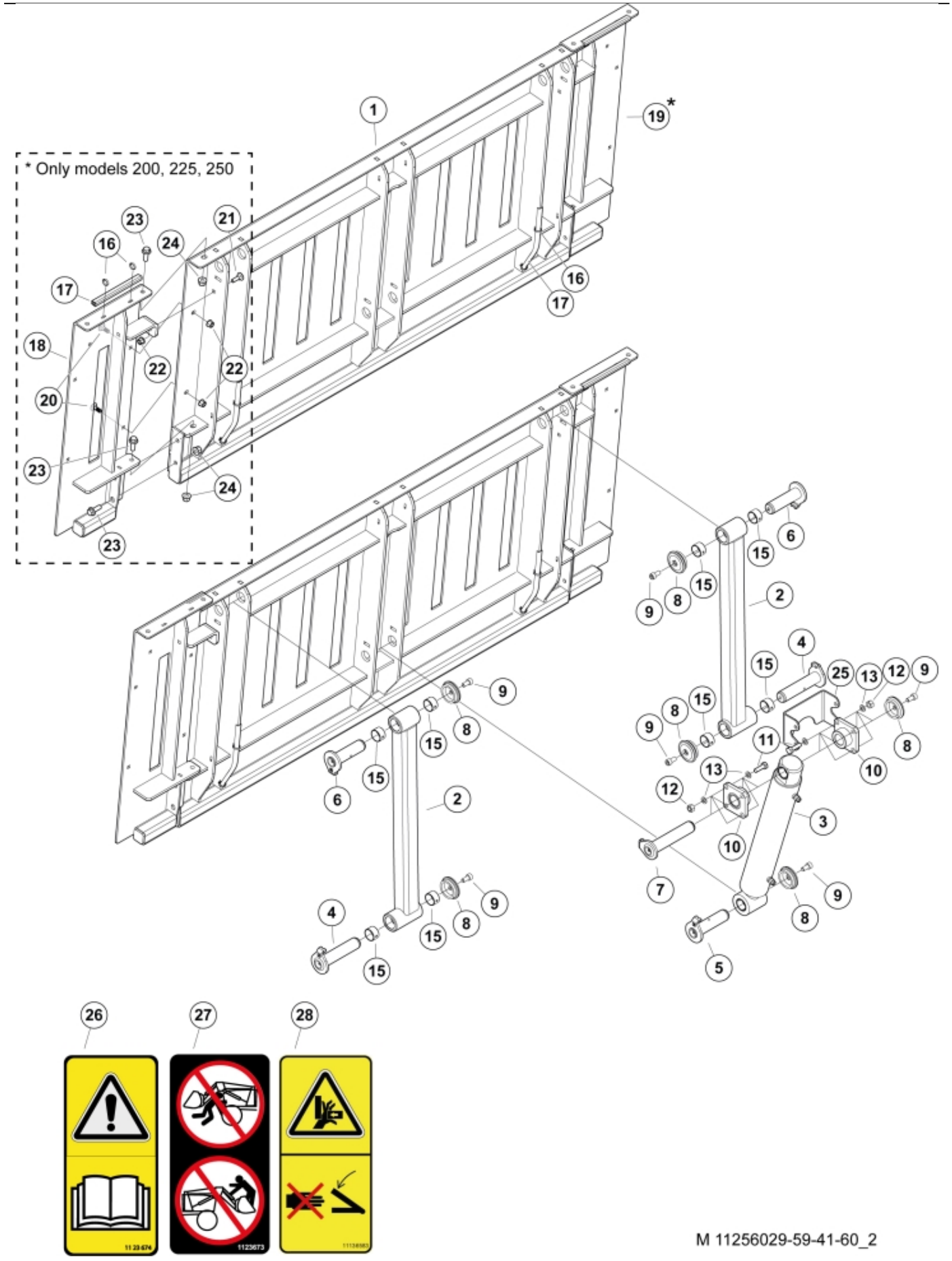
* Only models 200, 225, 250
1
19*
16
17
18
20
21
22
23
24
2
3
4
5
6
7
8
9
10
11
12
13
15
25
26
27
28
M 11256029-59-41-60_2

© 2025 Jost

With Sequence valve

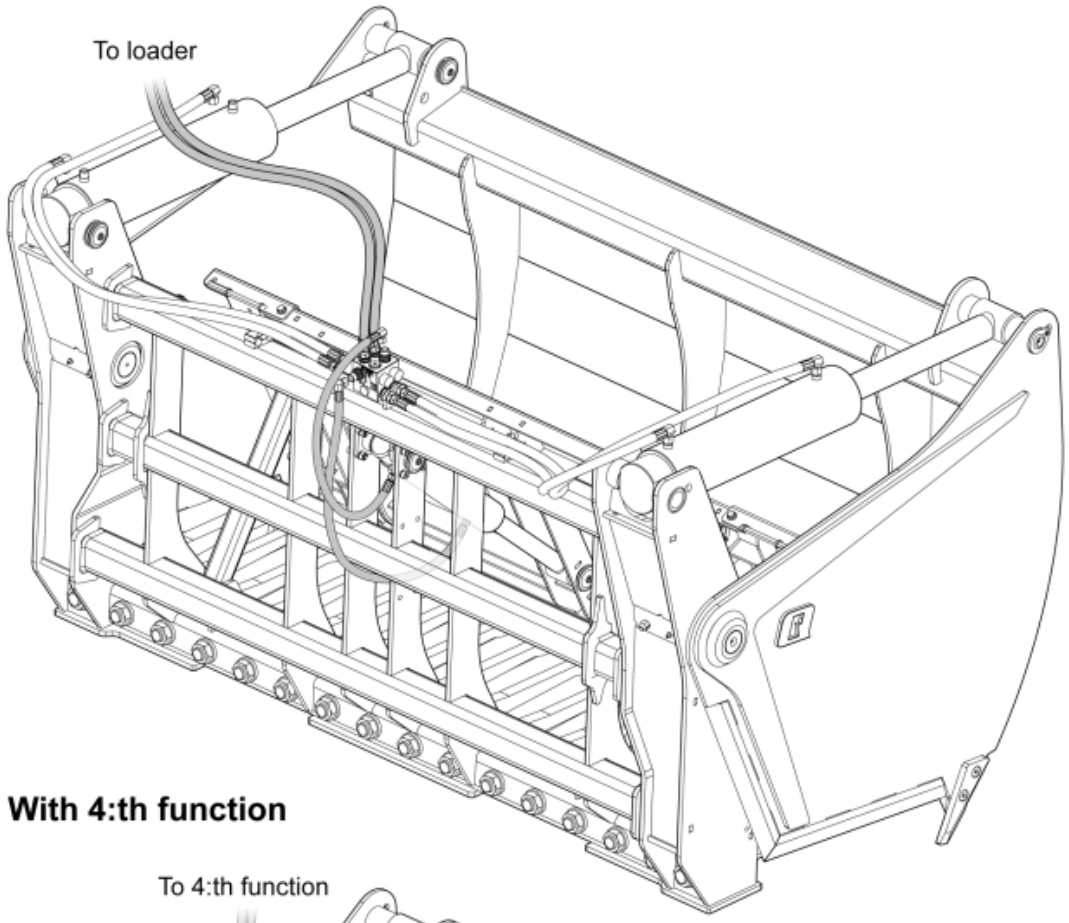

With 4:th function

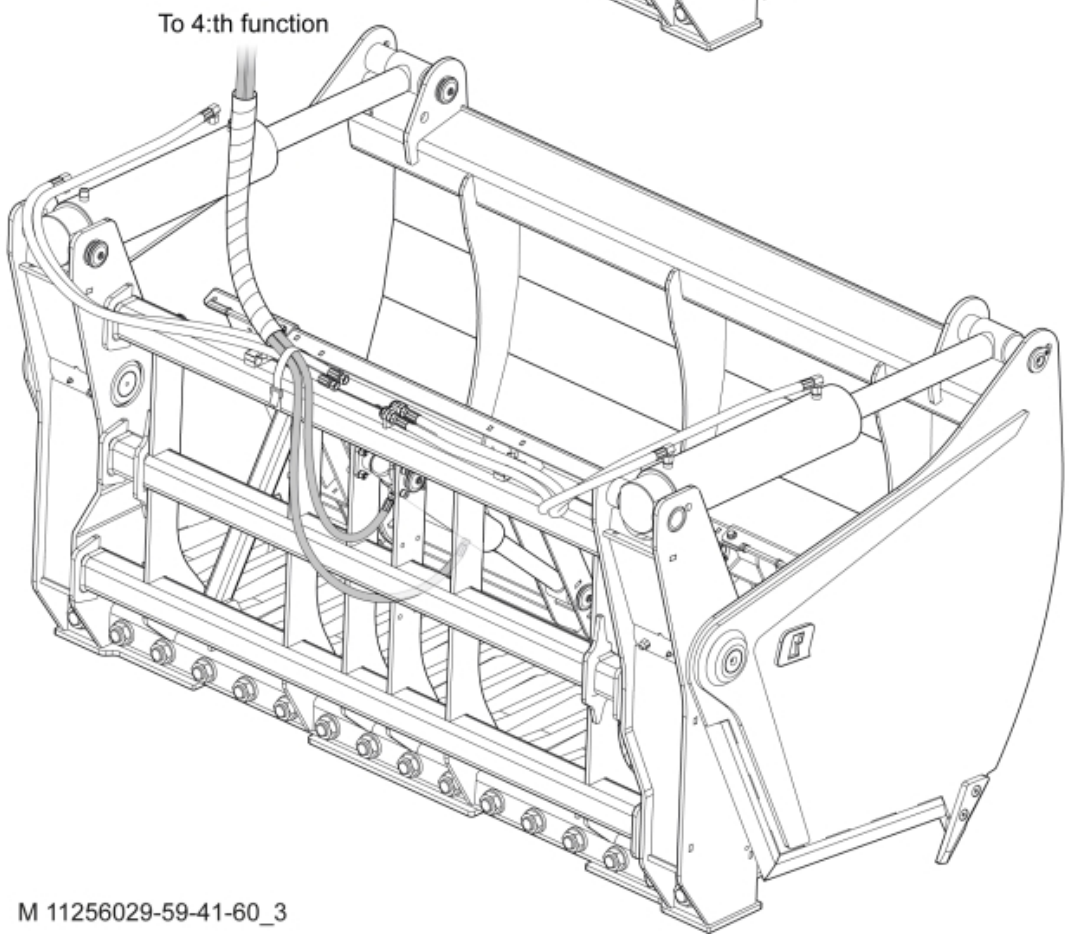

M 11256029-59-41-60_3

© 2025 Jost

Part assemblies Push out 200

PartNo	Pos	Qty	Name	Specifications
11256059		1	Push out 200	
60063218-17	1	1	Frame	
60062310-17	2	2	Arm	
60063291-1	3	1	Cylinder	
9020117	4	2	Pin	D=30mm
9020105	5	1	Pivot Pin	D=30, L=113mm
9020043	6	2	Pin	D=30mm
9020047	7	1	Pin	D=30mm, L=151mm
5215131	8	6	Locking cover	
5050608	9	6	Screw	MC6S M10x20 Loc
60062276-17	10	2	Bracket	
5002078	11	8	Screw	M6S 10x40 (8.8)
5011554	12	8	Nut	Loc-King M10
5013102	13	16	Washer	BRB 10 x 18 x 2
5013177	14	1	Washer	TBRSB 10.5x28x6
5018515	15	8	Bushing	D30 L=20
4500765	16	8	Cable tie, low profile	4.5x177
5221972	17	4	Rubber moulding	
60066532-17	18	1	Frame LH	
60069852-17	19	1	Frame RH	
5051457	20	4	Screw	M8x25
5005997	21	2	Screw	MVBF M8x30 (4.6)
5052122	22	6	Nut	
5052117	23	8	Screw	M6SF M10x30
5052123	24	8	Nut	M6MF M10 LOC 8.8
60086120	25	1	Plate	
1123674	26	1	Warning decal	"Read manual"
1123673	27	1	Warning decal	
11136583	28	1	Warning decal	

© 2025 Jost