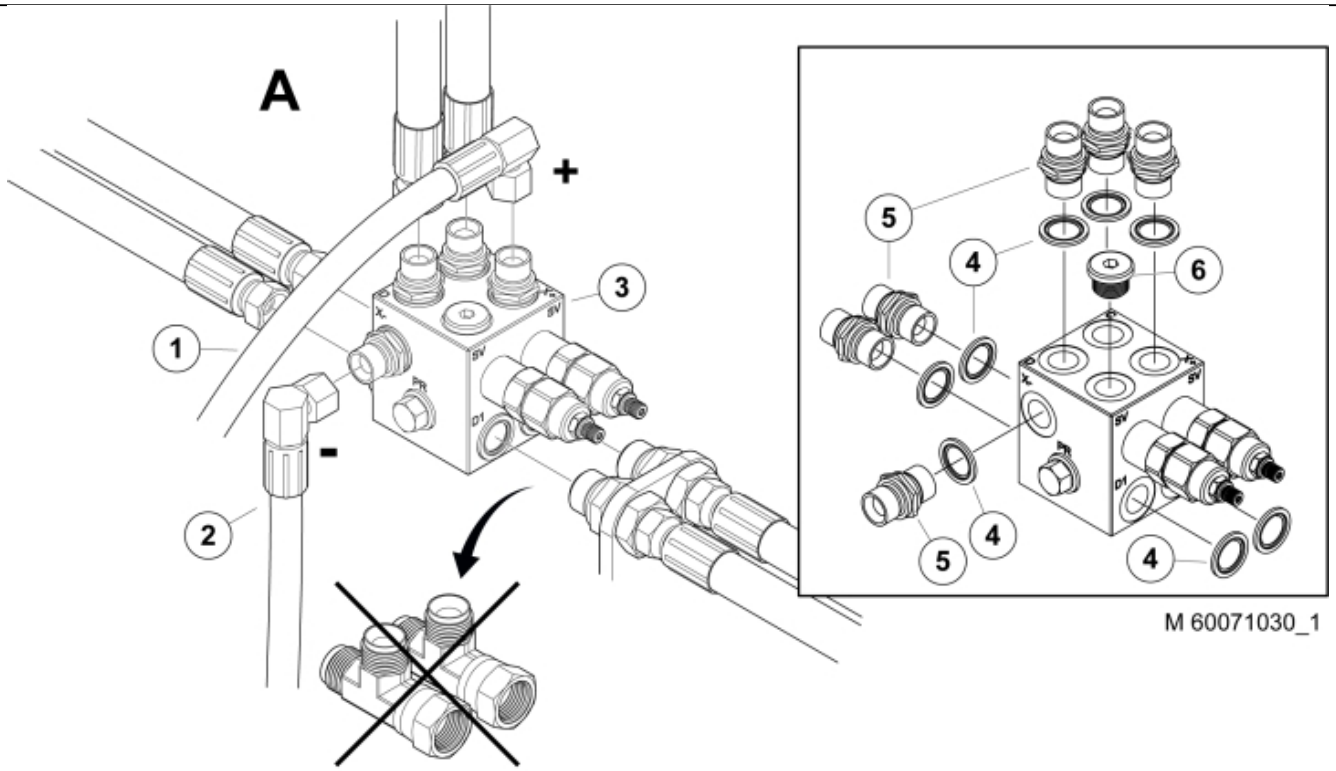

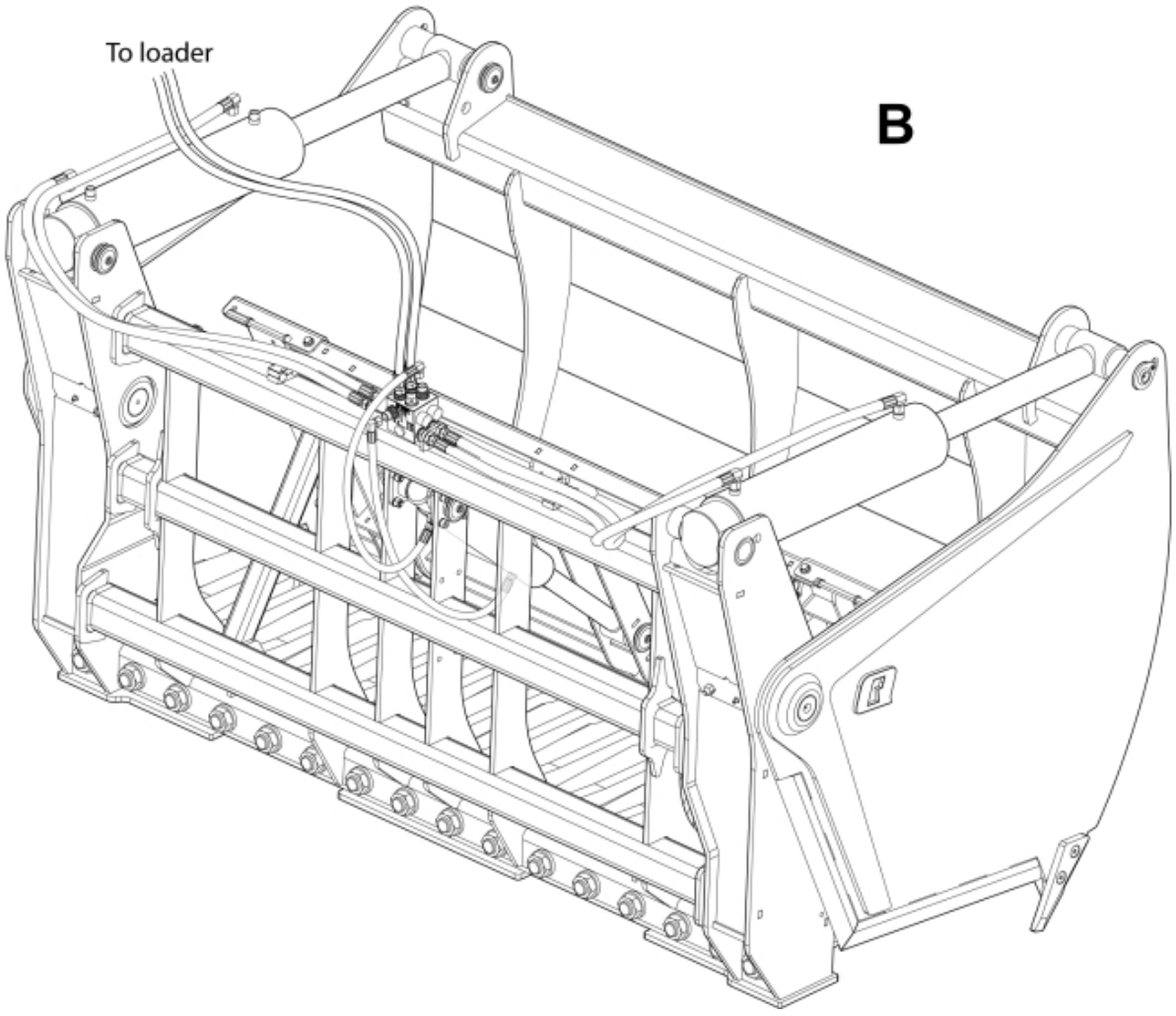

© 2025 Jost

C

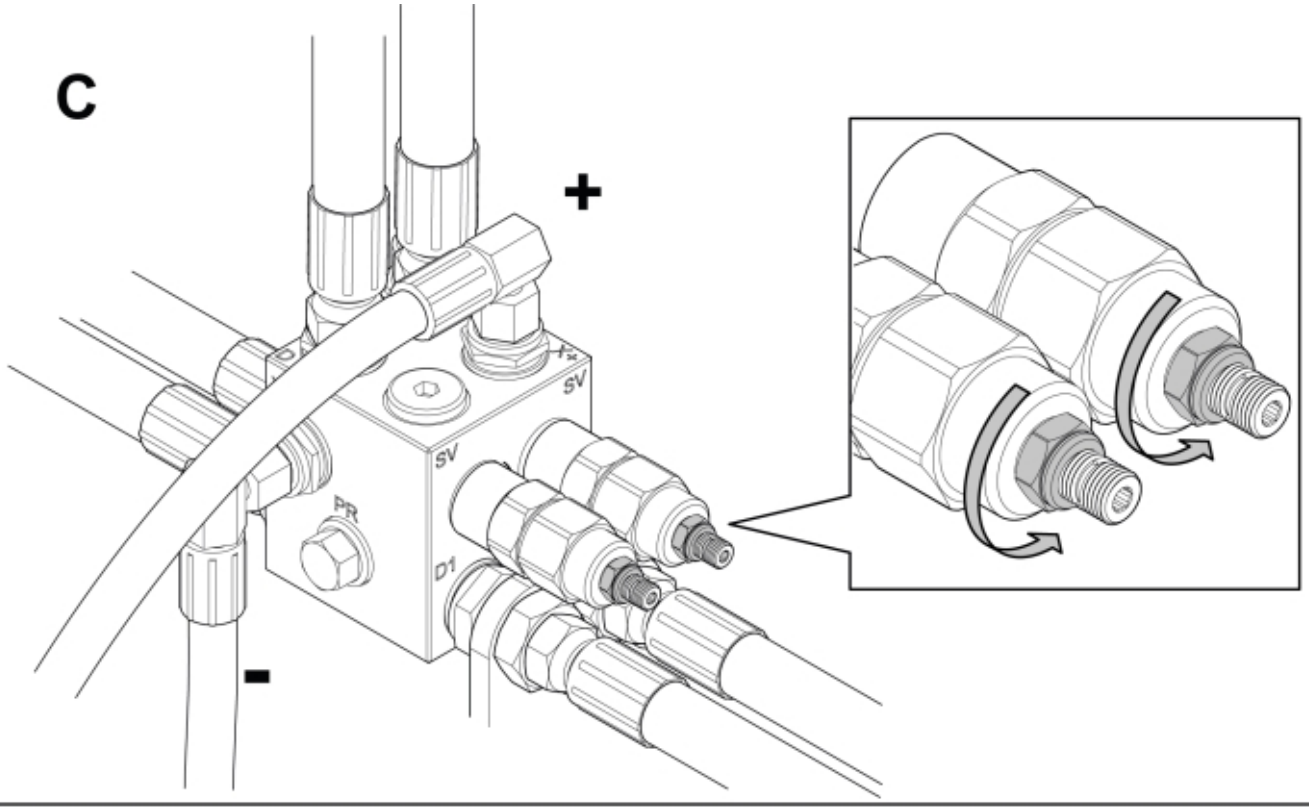

D

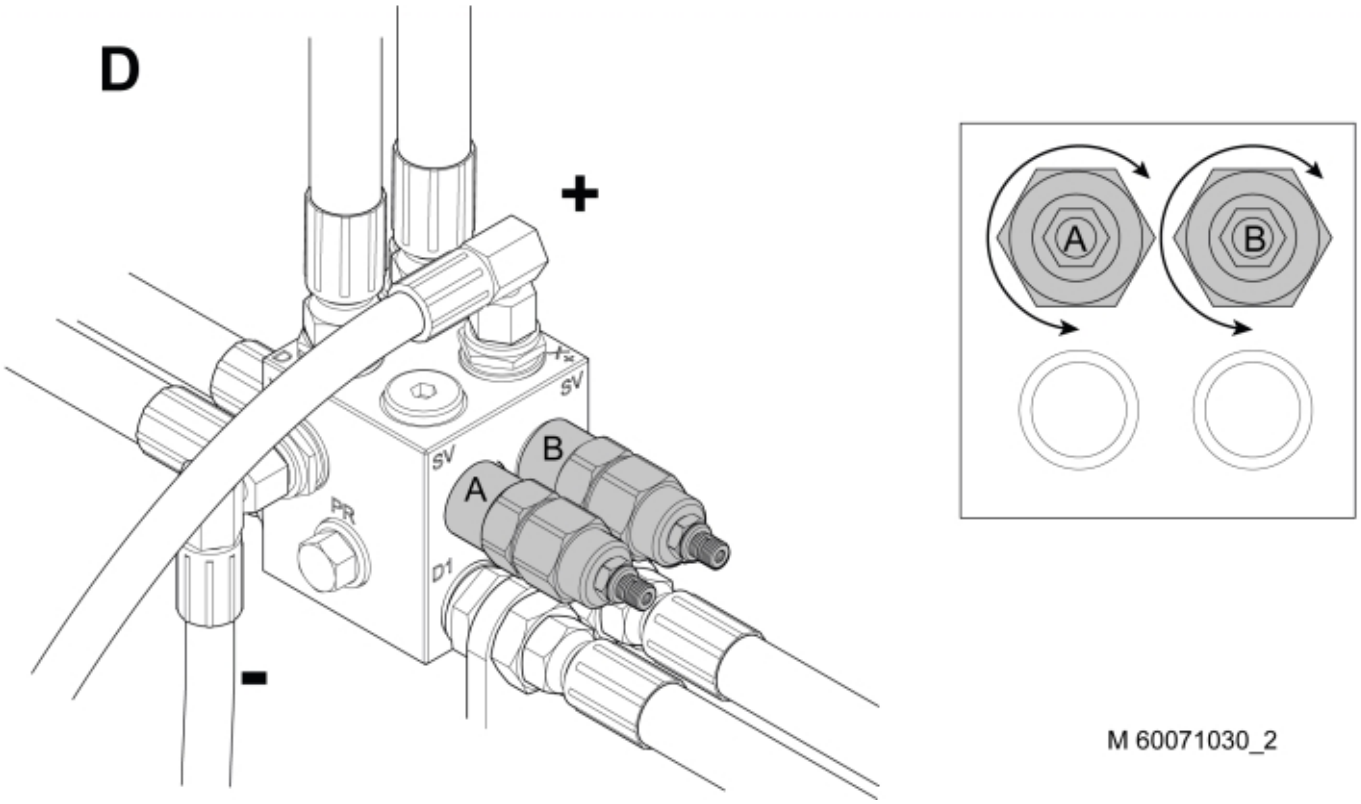

M 60071030_2

© 2025 Jost

Description	Push out mechanism
Part assemblies	Sequence valve

PartNo	Pos	Qty	Name	Specifications
60071030		1 PCS	Sequence valve	
60071587	1	1 PCS	Hose	3/8" L=670 3/8GRLM 1/2G90LMC
60071591	2	1 PCS	Hose	3/8" L=900 3/8GRLM 1/2G90LMC
	3	1 PCS	Sequence valve	
5013853	4	8	• Dowty washer	Tredo 1/2", Part is included in kit 60007907 Hose cpl., 9032177 Hose cpl.
1120012	5	6	• Adaptor	G 1/2"
5028245	6	1	• Plug	G1/2"

© 2025 Jost