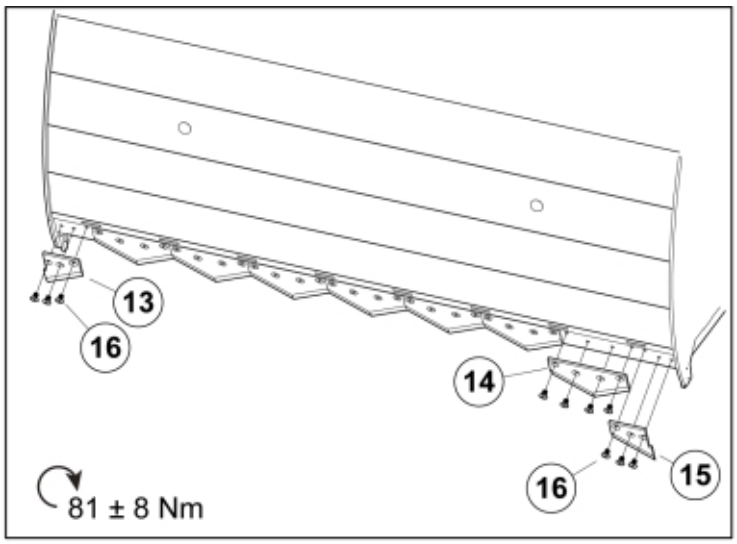

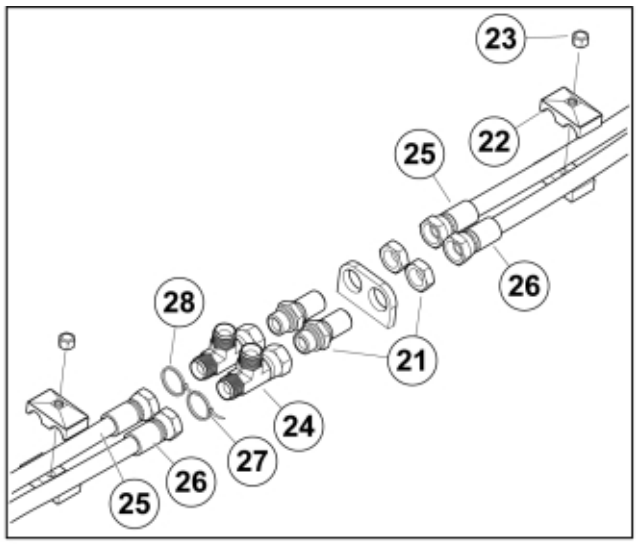

r11256071-070-069-030_1

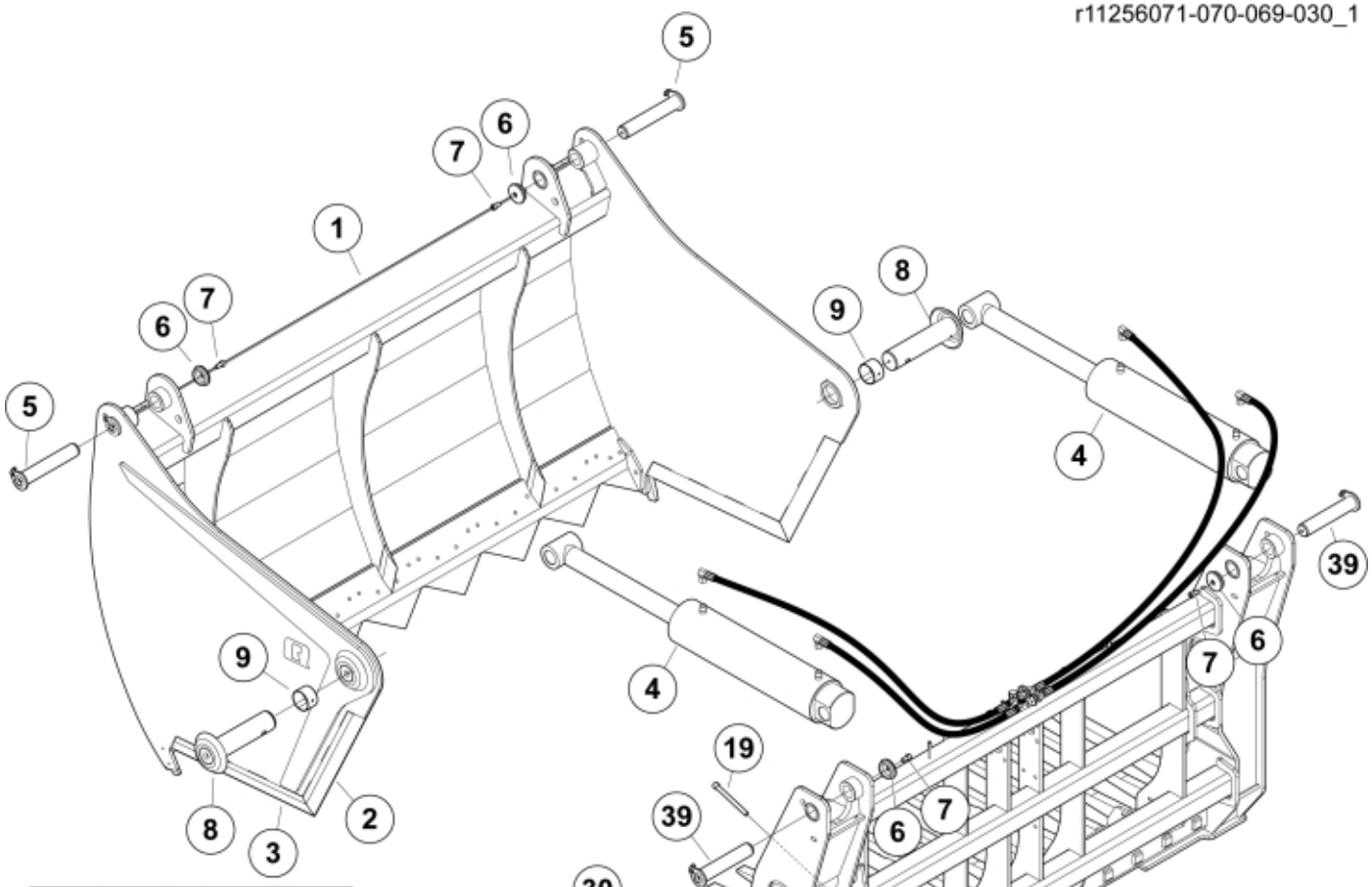

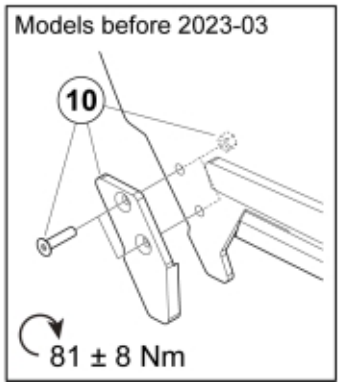

© 2025 Jost

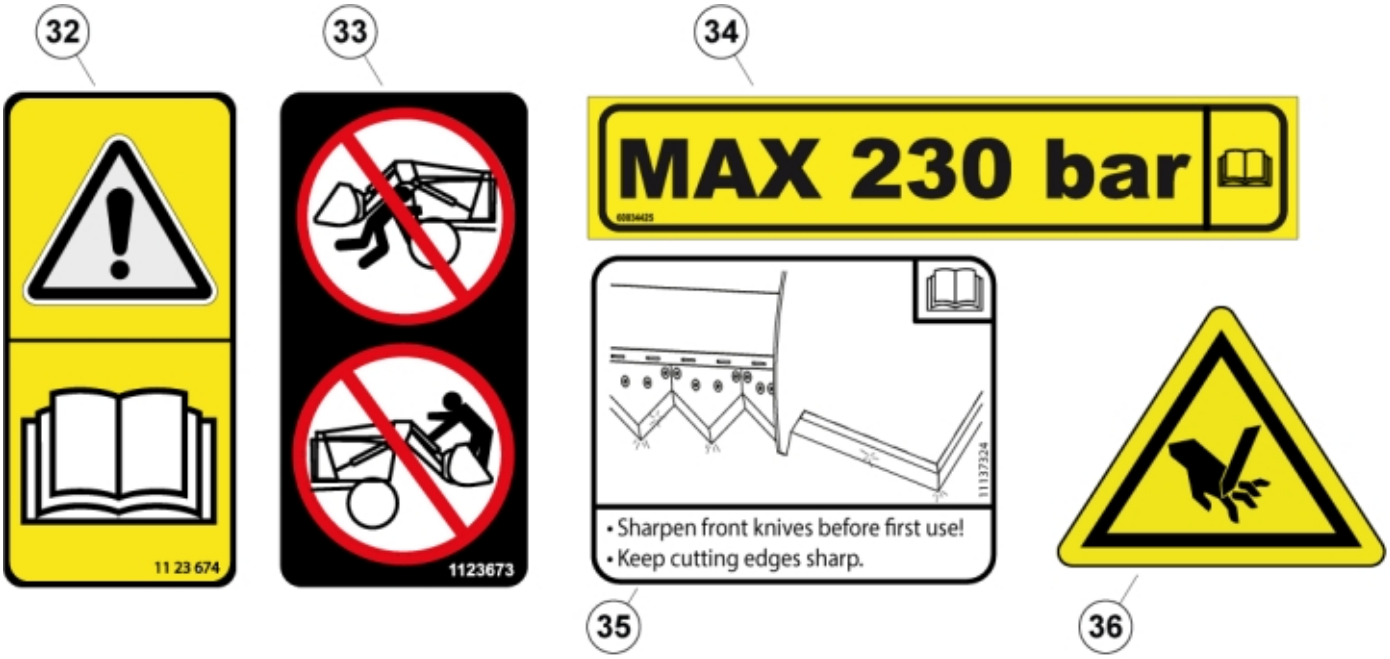

r11256071-070-069-030_2

© 2025 Jost

Part assemblies Silocut L+ 175 Profiled tines

PartNo	Pos	Qty	Name	Specifications
11256071		1	Silocut L+ 175 Profiled tines	
60093499-17	1	1	Front Part	
60066739	2	2	• Cutting edge	
60061405	3	2	• Cutting edge	
60119717-1	4	2	Cylinder	9/9/2026 12:00:00 AM
60030256	5	2	Pin cpl.	
5215131	6	4	Locking cover	
5050608	7	4	Screw	MC6S M10x20 Loc
60027947	8	2	Pin	
5051187	9	2	Bushing	
60092296	10	1	Service kit	
		1	• Tooth	
		1	• Tooth	
		4	• Screw	
		4	• Nut	M12 Loc
60089923-22	13	1	Cutting edge RH	
11262629-22	14	6	Cutting edge	250mm
60089924-22	15	1	Cutting edge LH	
5050610	16	30	Screw	MF6S M12X20 (12.9)
60061435-22	17	2	Plate	
5005990	18	8	Screw	MF6S M10 x 30 (10.9)
5052116	19	2	Screw	MC6S M12x130
5011555	20	2	Nut	M12 Loc
11120580	21	2	Adapter cpl.	
5051191	22	2	Hose clamp	
5011553	23	2	Nut	M6M M8 Loc-king
5028031	24	2	T-Adapter	
		1	Hose kit	
60070871	25	2	• Hose	1/2" L=1490 1/2GRLM 1/2G90LMC
60070870	26	2	• Hose	1/2" L=1015 1/2GRLM 1/2G90LMC
5022177	27	1	Cable tie	Red
5022179	28	1	Cable tie	Blue
60070857	29	1	Frame, with tines	
60054748-17	30	12	• Tine	
60062177-17	31	2	• Tine	
1123674	32	1	Warning decal	"Read manual"
1123673	33	1	Warning decal	
60034425	34	1	Warning decal	
11137324	35	1	Warning decal	"Keep cutting edges sharp"
11136516	36	1	Warning decal	
60056616	37	2	Decal	"Q" medium 110mm
60062202	38	1	Decal	"Silocut L+"
60006393	39	2	Pin	

© 2025 Jost