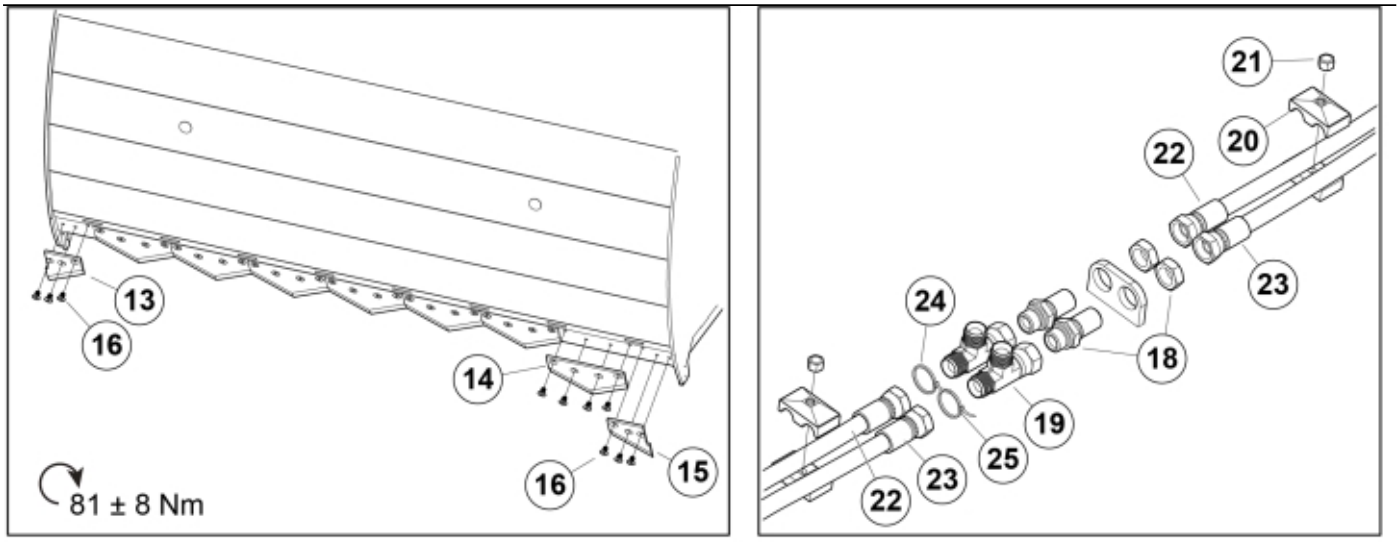

r11256087-088_1

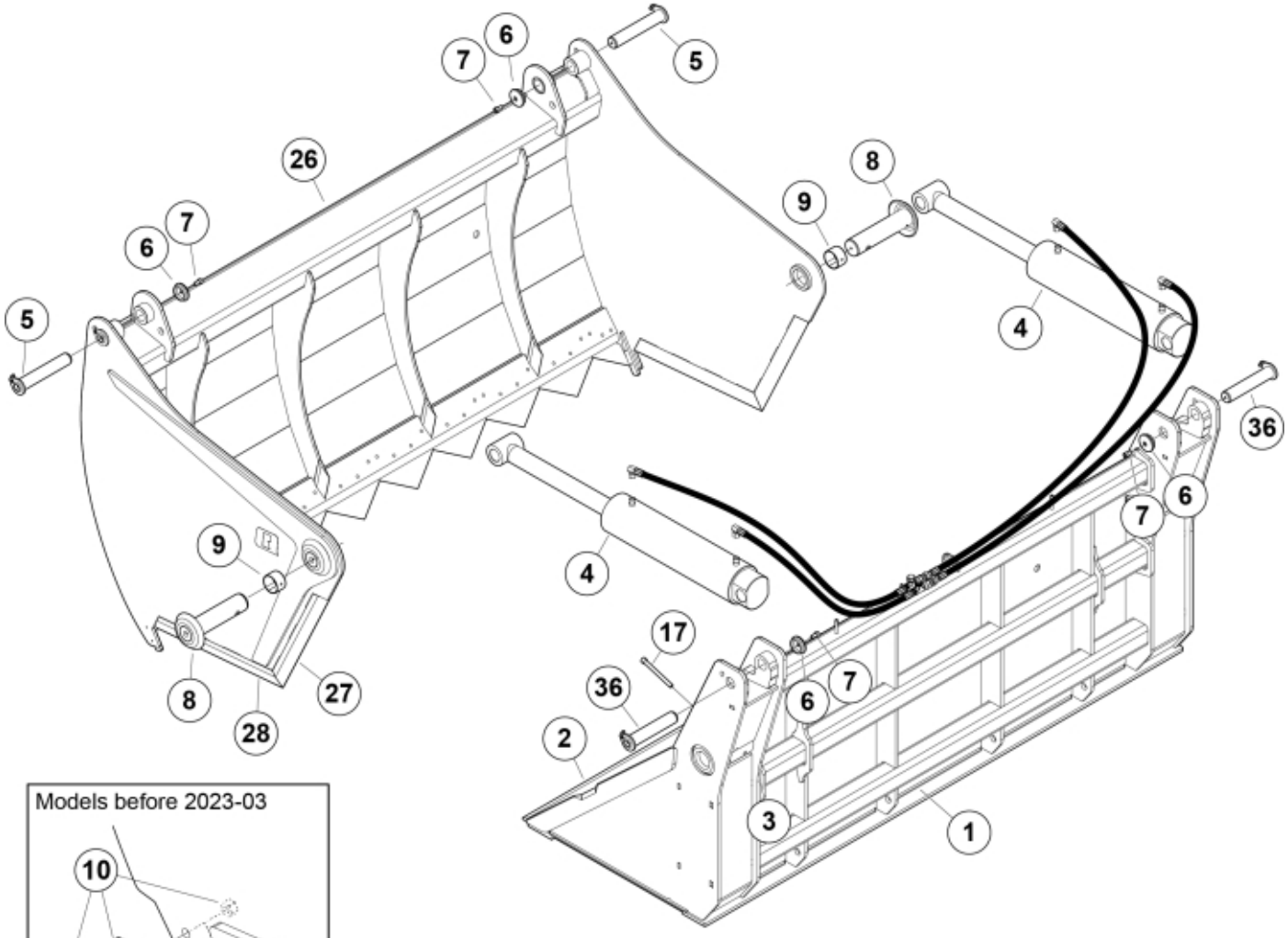

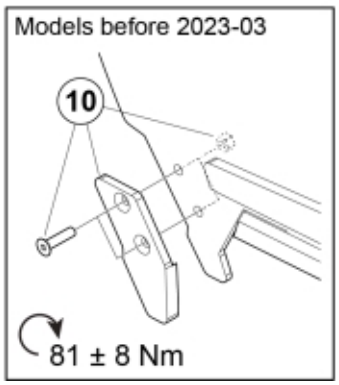

© 2025 Jost







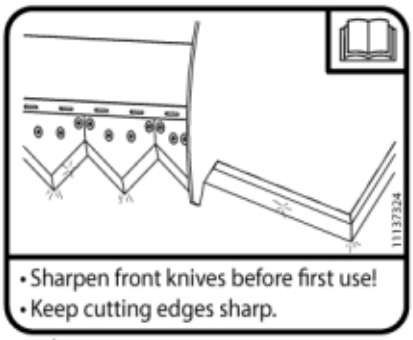







r11256086-024-087-088_2

© 2025 Jost

Part assemblies Silocut L+ 250 Bucket

PartNo	Pos	Qty	Name	Specifications
11256088		1	Silocut L+ 250 Bucket	
60071511	1	1	Bucket	
60071515	2	1	• Cutting edge	250
5011555	3	2	Nut	M12 Loc
60119717-1	4	2	Cylinder	9/9/2026 12:00:00 AM
60030256	5	2	Pin cpl.	
5215131	6	4	Locking cover	
5050608	7	4	Screw	MC6S M10x20 Loc
60027947	8	2	Pin	
5051187	9	2	Bushing	
60092296	10	1	Service kit	
		1	• Tooth	
		1	• Tooth	
		4	• Screw	
		4	• Nut	M12 Loc
60089923-22	13	1	Cutting edge RH	
11262629-22	14	9	Cutting edge	250mm
60089924-22	15	1	Cutting edge LH	
5050610	16	42	Screw	MF6S M12X20 (12.9)
5052116	17	2	Screw	MC6S M12x130
11120580	18	2	Adapter cpl.	
5028031	19	2	T-Adapter	
5051191	20	2	Hose clamp	
5011553	21	2	Nut	M6M M8 Loc-king
		1	Hose kit	
60062862	22	2	• Hose	1/2" L=1865 1/2GRLM 1/2G90LMC
60062863	23	2	• Hose	1/2" L=1390 1/2GRLM 1/2G90LMC
5022177	24	1	Cable tie	Red
5022179	25	1	Cable tie	Blue
60093528-17	26	1	Jaw	
60066739	27	2	• Cutting edge	
60061405	28	2	• Cutting edge	
1123674	29	1	Warning decal	"Read manual"
1123673	30	1	Warning decal	
60034425	31	1	Warning decal	
11137324	32	1	Warning decal	"Keep cutting edges sharp"
11136516	33	1	Warning decal	
60056616	34	2	Decal	"Q" medium 110mm
60062202	35	1	Decal	"Silocut L+"
60006393	36	2	Pin	
5022119		2	Plug	

© 2025 Jost