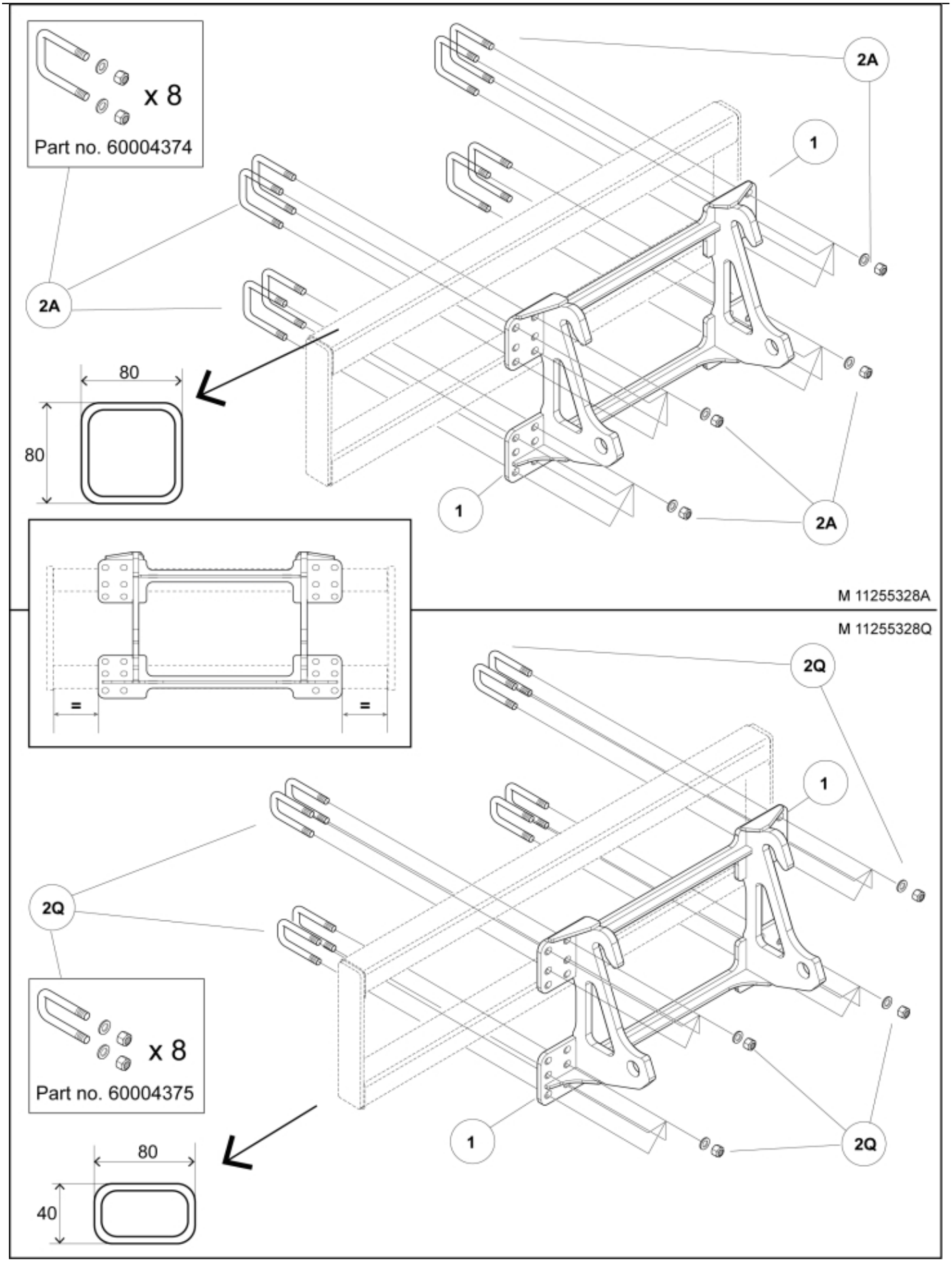
x 8
Part no. 60004374
2A
1
2A
80
80
1
2A
=
=
M 11255328A
M 11255328Q
2Q
1
2Q
x 8
Part no. 60004375
80
40
1
2Q

© 2025 Jost

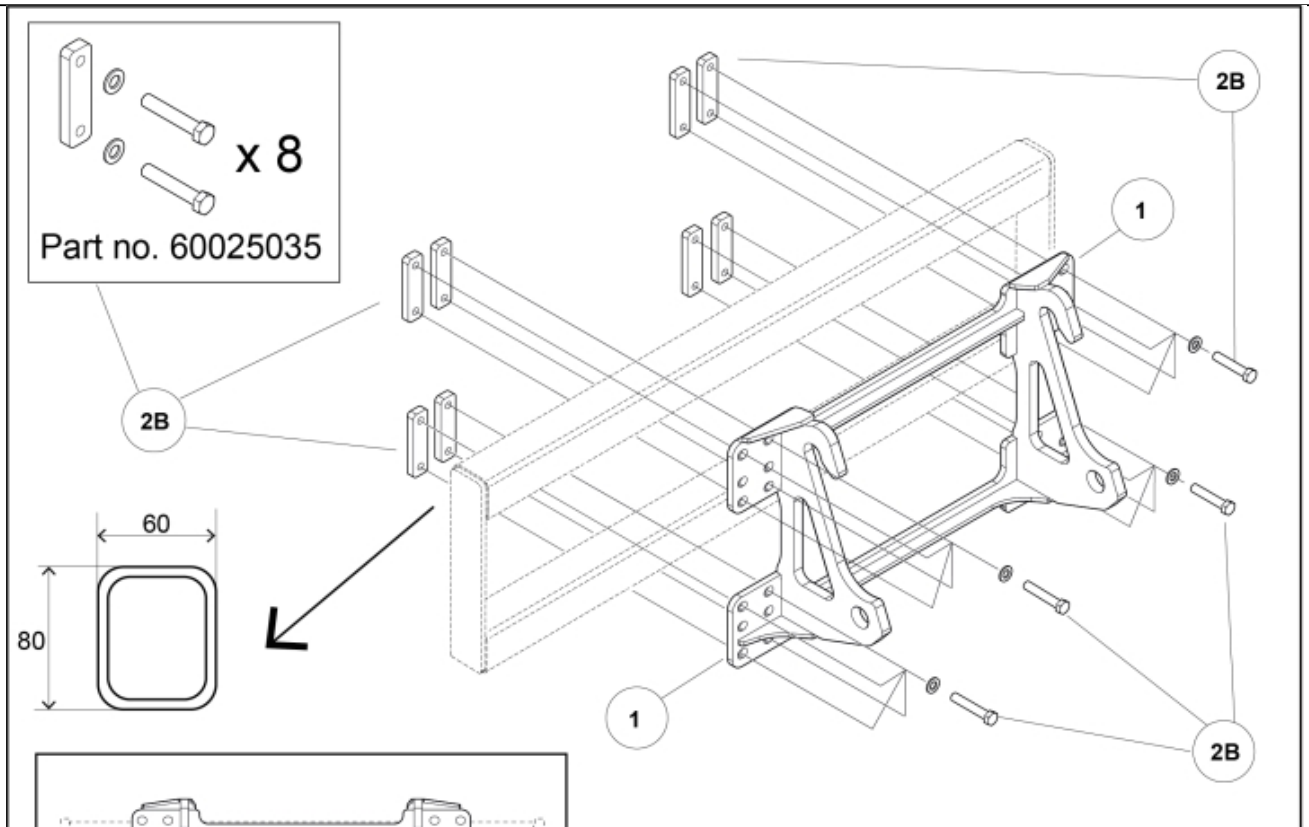

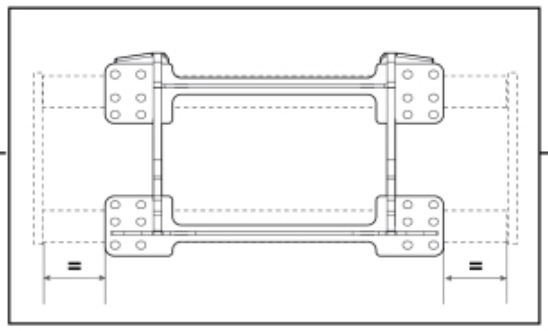

M 11255328B

M 11255328C

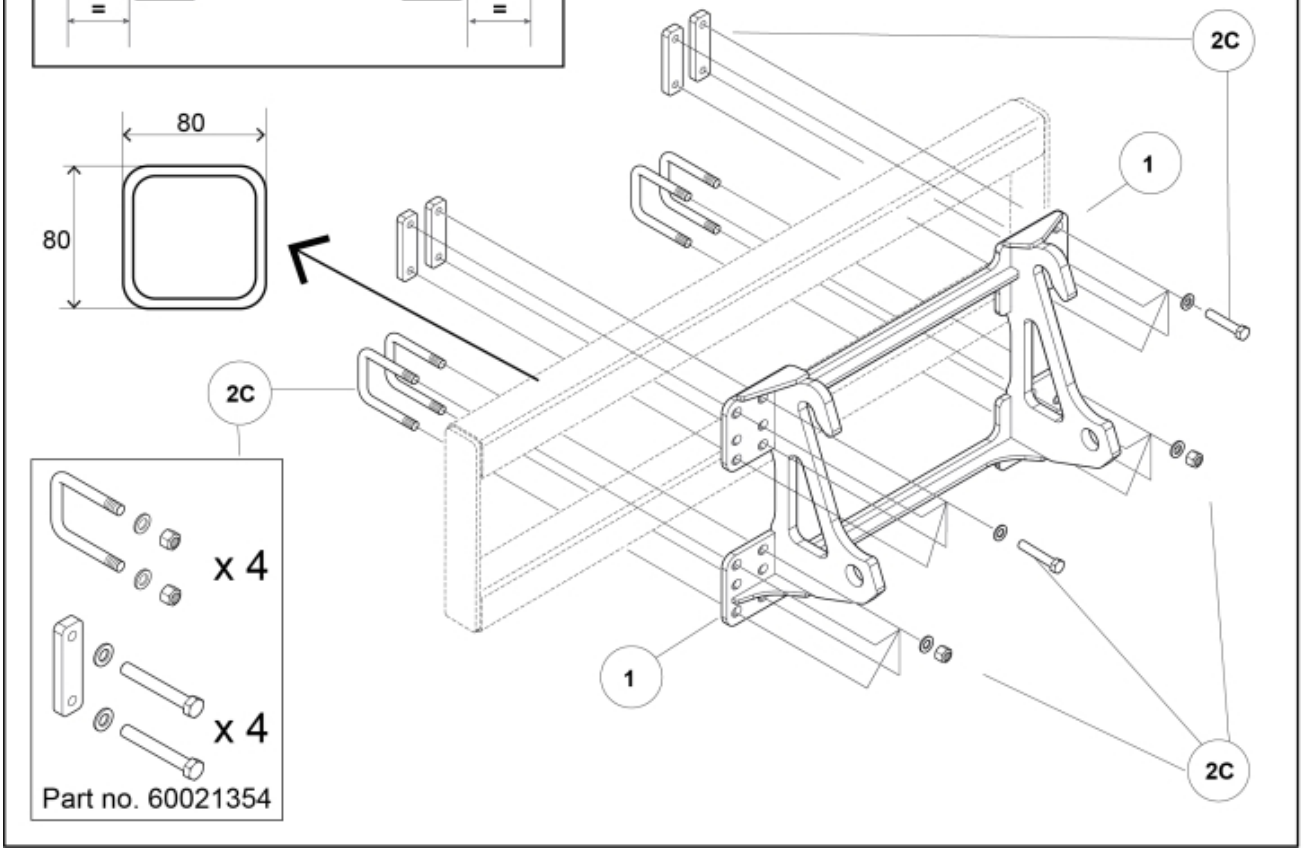

© 2025 Jost

11255328A
11255328Q

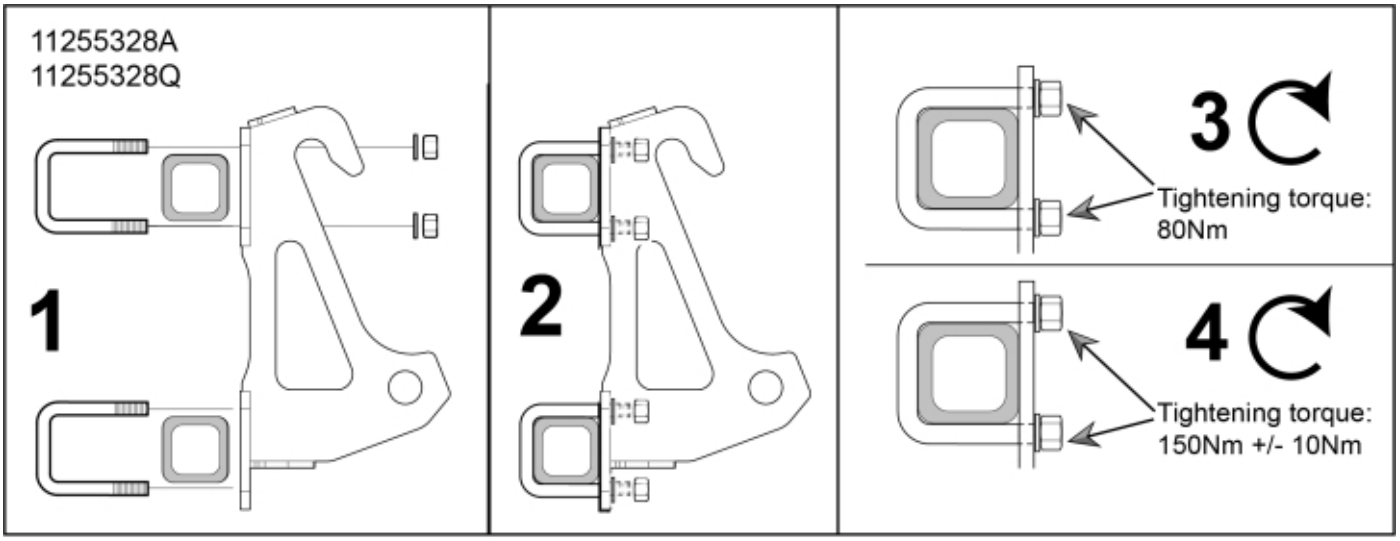

11255328B

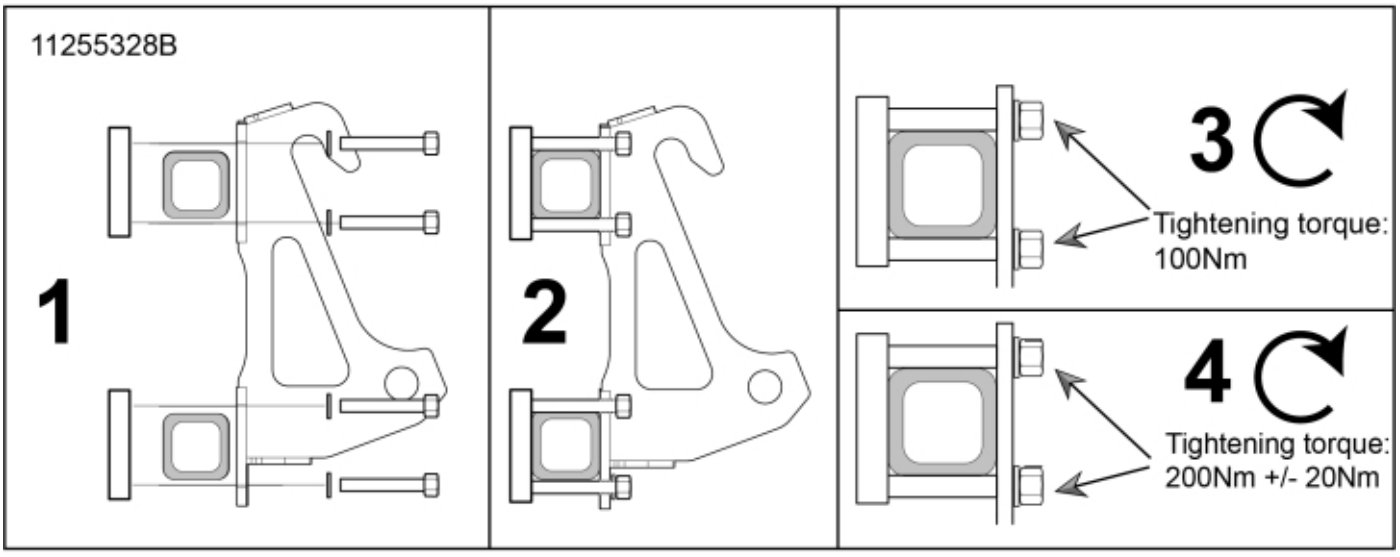

11255328C

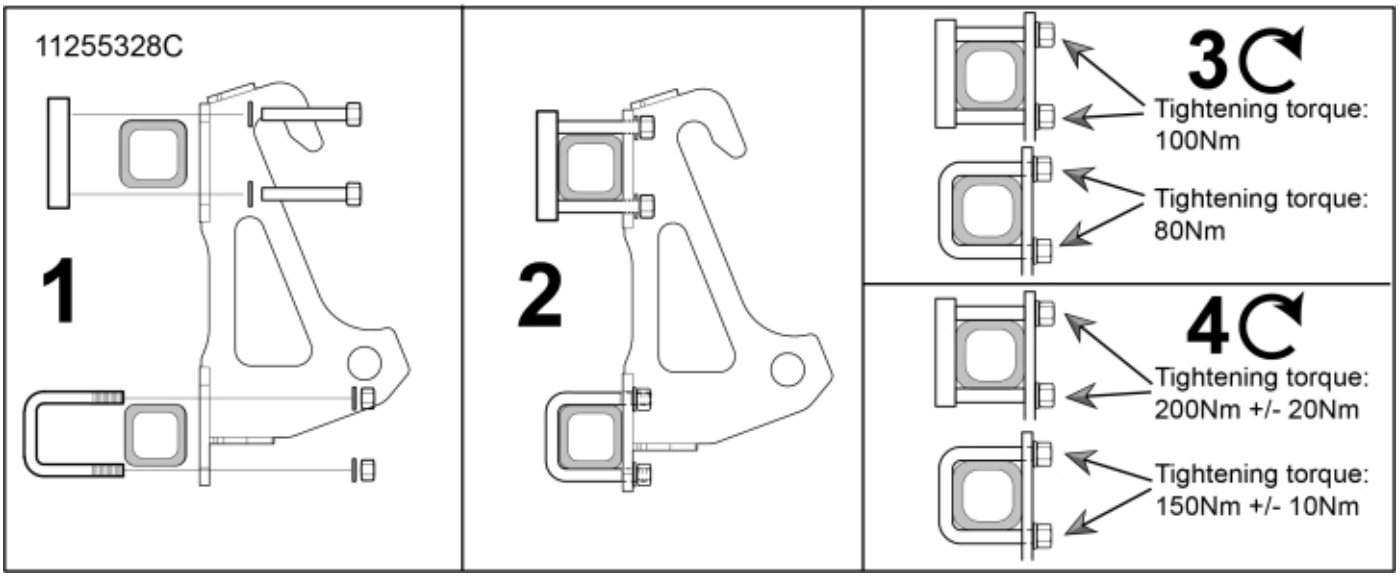

© 2025 Jost

Part assemblies Attachment kit Giant

PartNo	Pos	Qty	Name	Specifications
60069120	1	1 PCS	Attachment Giant	
60004374	2A	1 PCS	Bolt kit	
60020469		8	• U-bolt	80x80 M16 (60003288)
5013105		16	• Washer	BRB 17 x 30 x 3 300HV
5011557		16	• Nut	Loc-King M16
60004375	2Q	1 PCS	Bolt kit	
60020468		8 PCS	• U-bolt	80x40 M16 (60003289)
5013105		16	• Washer	BRB 17 x 30 x 3 300HV
5011557		16	• Nut	Loc-King M16
60025035	2B	1 PCS	Bolt kit	
60050544		8 PCS	• Plate	
5050888		16	• Screw	M6S M16x90 10.9
5013105		16	• Washer	BRB 17 x 30 x 3 300HV
60021354	2C	1 PCS	Bolt kit	
60050544		4 PCS	• Plate	
5050810		8	• Screw	M6S M16x120
5013105		16	• Washer	BRB 17 x 30 x 3 300HV
60020469		4	• U-bolt	80x80 M16 (60003288)
5011557		8	• Nut	Loc-King M16

© 2025 Jost