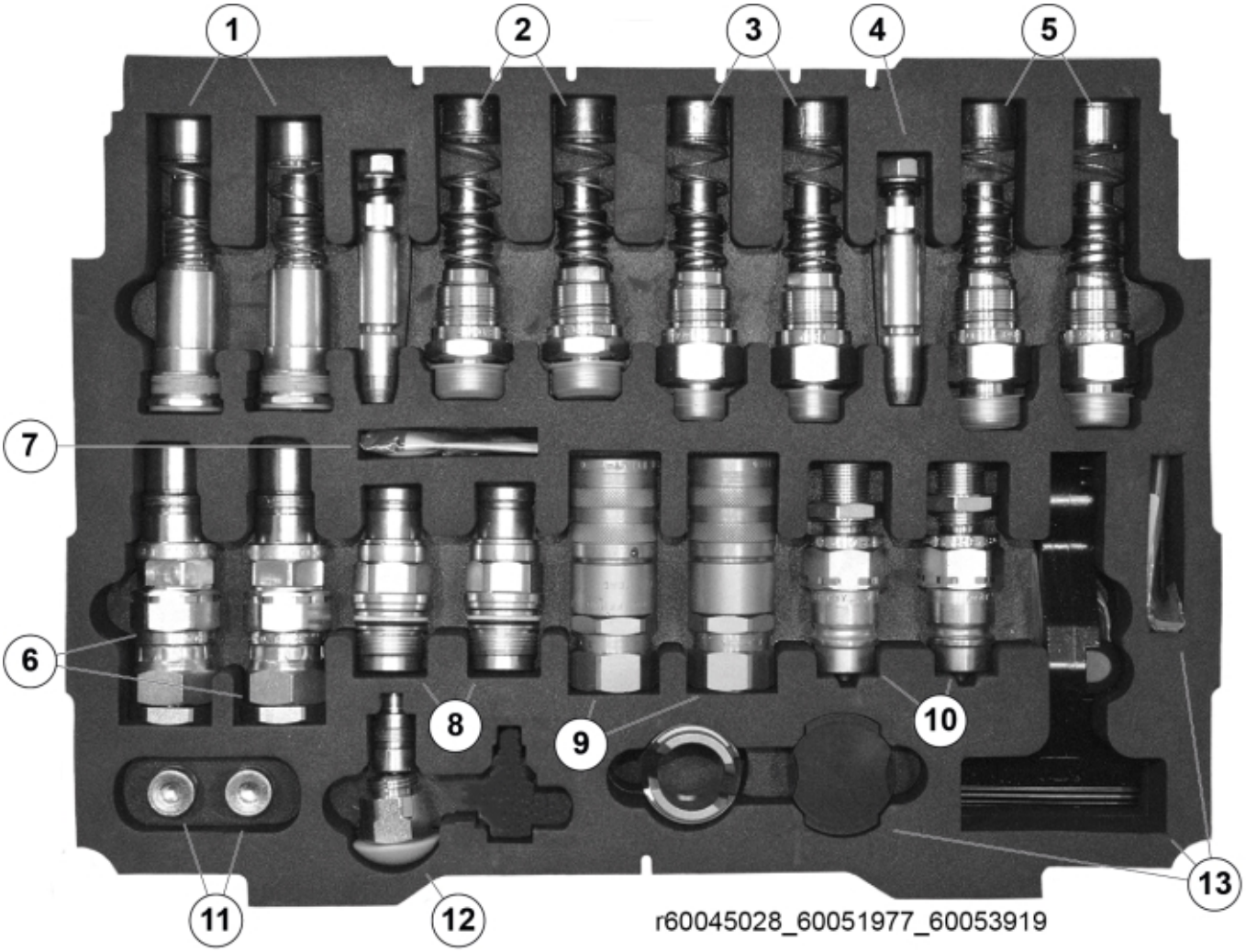

© 2025 Jost

Description	AGCO EME
Part assemblies	Service suitcase – Hydraulic couplings

PartNo	Pos	Qty	Name	Specifications
60053919		1	Service suitcase – Hydraulic couplings	
5044968	1	2	Coupling socket	
10301544	2	2	Coupler (F)	
10550382	3	2	Coupling 3/8" (F)	3/8"
10301554	4	1	Dowel kit	Kit, 2 pcs
10550202	5	2	Coupling	1/2"
10301569	6	2	Coupler (M)	
4501264	7	2	Seal kit	1 seal kit/coupling required
4500294	8	2	Coupling (M)	Replaces 5044956/60017561
5044976	9	2	Coupling	3/8" (5044946)
5044940	10	2	Coupling	ISO-A 1/2" Male - G3/8
10301547	11	1	Screw kit	VP4
4501199	12	1	Safety kit	
60004357	13	1	Lever set	replaces 5044965

© 2025 Jost