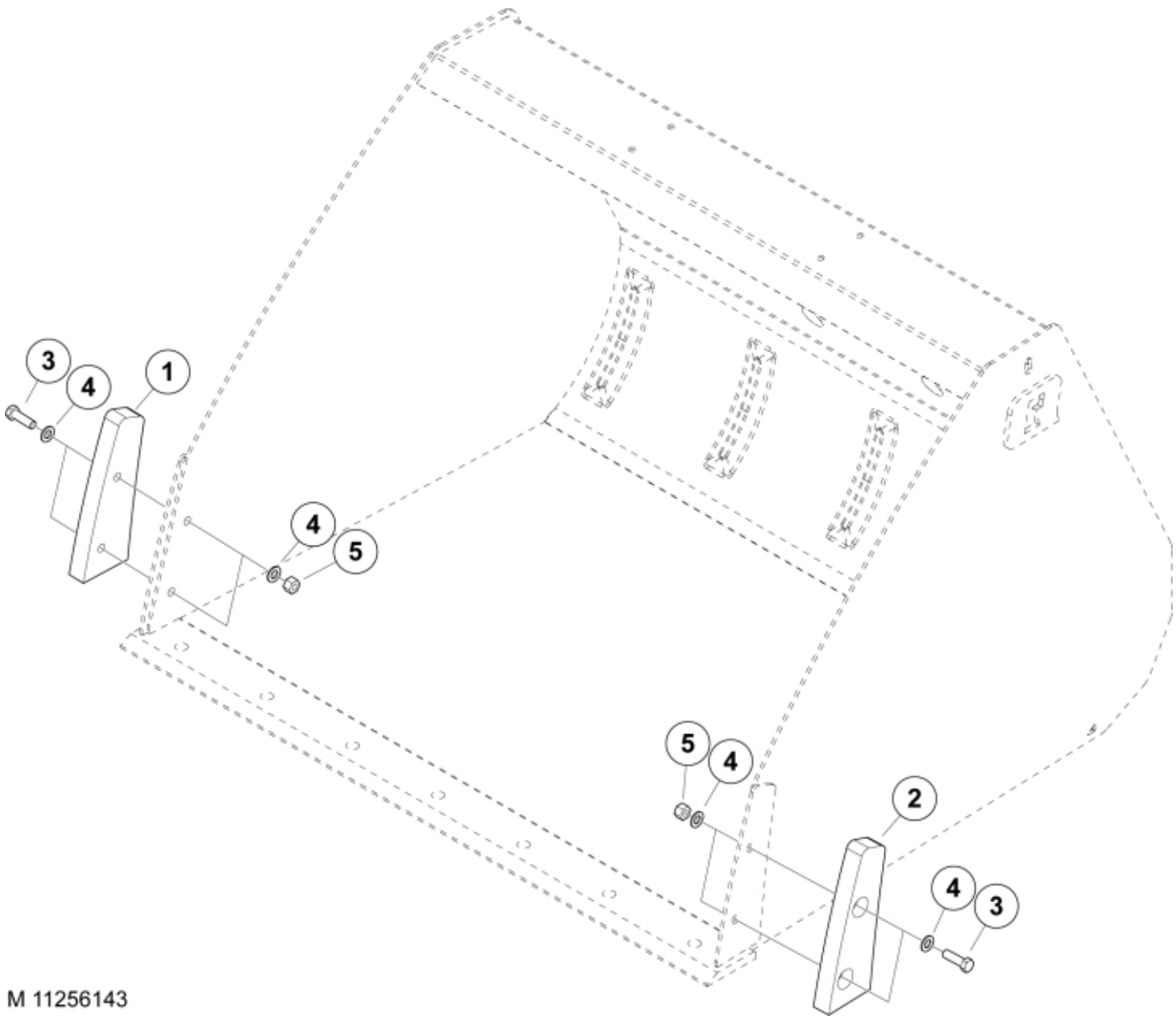

M 11256143

© 2025 Jost

Part assemblies Wall saver

PartNo	Pos	Qty	Name	Specifications
11256143		1	Wall saver	
60071239	1	1	Wall saver RH	
60072250	2	1	Wall saver LH	
5002123	3	4	Screw	M6S M12x40 (10.9)
5013104	4	8	Washer	13.5 x 24 x 2
5011555	5	4	Nut	M12 Loc

© 2025 Jost