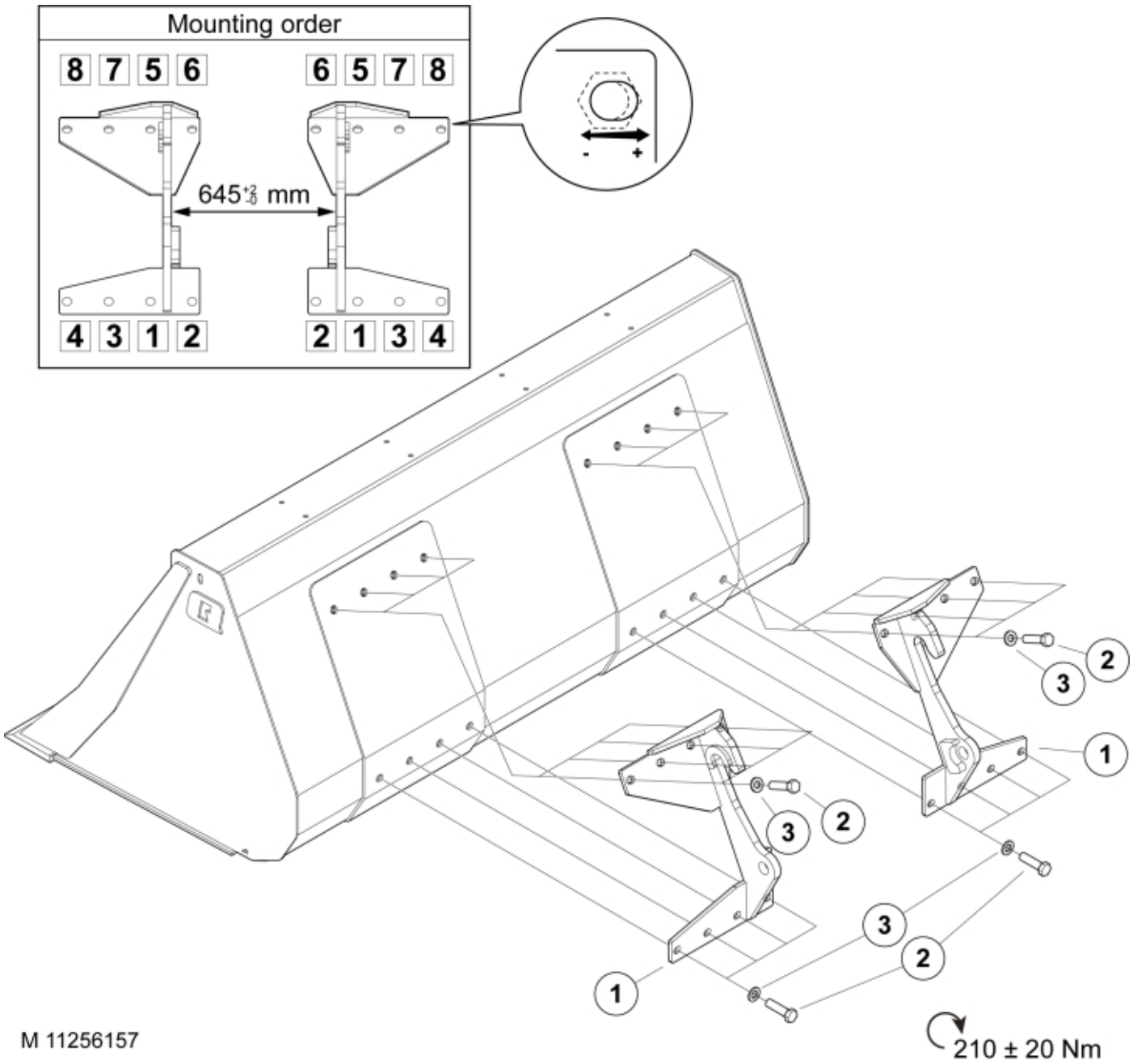
Mounting order
8 7 5 6
6 5 7 8
645 +2 -0 mm
4 3 1 2
2 1 3 4
- +
2
3
1
2
3
3
2
1
M 11256157
210 ± 20 Nm

© 2025 Jost

Part assemblies Attachment kit Schäffer SWH1

PartNo	Pos	Qty	Name	Specifications
11256157		1	Attachment kit Schäffer SWH1	
60073256	1	1	Attachment Schäffer SWH1	
60047988		2	Bolt kit	M16
5002153	2	8	• Screw	M6S M16 x 45
5051493	3	8	• Washer	M16

© 2025 Jost